SIEMENS

Climatix™
BACnet communication with POL908.00 or POL904.00 or POL909.80
Objects
for District Heating application DH1 V1.2x

CE1Z2912en
2018-01-22

Building Technologies

Siemens Switzerland Ltd.
Building Technologies Division
International Headquarters
Gubelstrasse 22
6301 Zug
Switzerland
Tel. +41 58-724 24 24
www.siemens.com/buildingtechnologies

Table of contents

1 About this document

1.1 Revision history

Version of Application	Date	Changes	Section	Pages
V1.2x	Current edition	Document validity	1.2	
		New application Solar	2.1	
		Corrections	all	
V1.1x	29.01.2014	New application diagrams, additional BACnet objects	all	
V1.0	08.01.2014	Data point according to BACnet mapping Com_BACnet.csv of the new object instance number STD-DH1-V110, version V1.10.	all	

1.2 Document validity

This document applies to the following application:

Application	Version	With hardware (ASN)
District Heating application DH1	V1.2x	POL638.x0/DH1

This document is a supplement to the respective general integration guides for POL908.00 (BACnet/IP), POL904.00 (BACnet MS/TP) or POL909.80 (AWM and BACnet IP). The general integration guides contain all general information such as document conventions, important information on safety, trademarks, copyright etc. are valid for this document as well.

This document contains the uniqe information for the product mentioned above. All general engineering information such as mounting modules, communication settings etc. are described in the integration guide.

Prerequisite

User has read the respective general integration guide (see Reference documents).

1.3 Reference documents

Document title	Type of document	Document No.
Applications for District Heating substations	Basic documentation	CB1P2910en
BACnet PICS	Basic documentation	CB1P3939en
Communication module BACnet/IP	Data sheet	CB1Q3933en
BACnet communication modules	Basic documentation	CB1P3933en
BACnet/IP communication with POL908.00	Integration guide	CB1J3962en
BACnet MS/TP communication with POL904.00	Integration guide	CB1J3967en
Advanced Web and BACnet Module POL909.80 (AWB)	Integration guide	CB1J3937en
Advanced Web and BACnet module with POL909.80	Data sheet	CB1Q3966en

2 Climatix DH application V1.2x

2.1 General information

What are Siemens DH applications?

Climatix DH (**D**istrict **H**eating) applications from version V1.2x on, for comprise predefined monitoring and control functions for a particular plant type.
Features:

- OEM customers receive standard applications as a set of loadable files. They can be loaded in the controller via SD card.
- An HMI operator unit allows for assigning inputs and outputs to the respective plant as well as select, configure and parameterize the required functions.

Siemens DH application DH1 V1.2x

Siemens Climatix DH application V1.2x is available at this time. It contains all common functions to control and monitor DH units. The following diagram provides an overview of selectable measured values and control equipment:

Pre-controller 1 to 3

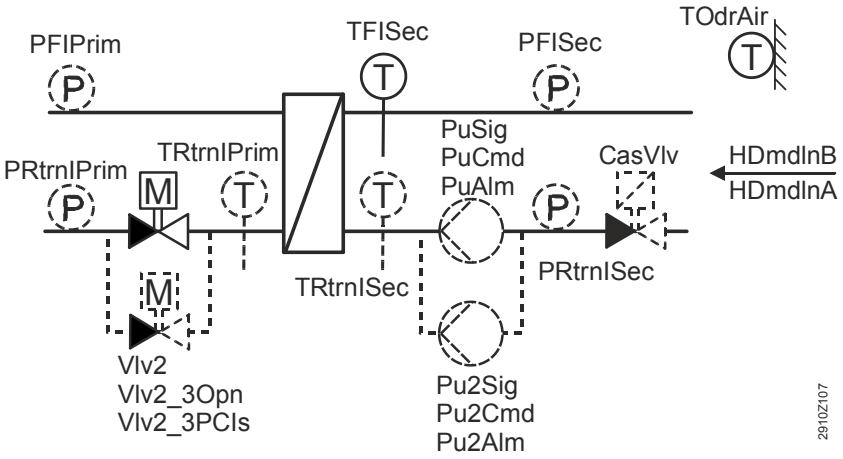

Scheme	HMI operation	Description
TOdrAir	Outside temp.	Outside temperature sensor
TFISec	Flow temp.sec.	Flow temperature sensor secondary
TRtrnPrim	Return temp.prim.	Return temperature sensor primary
TRtrnSec	Return temp.sec.	Return temperature sensor secondary
PFIPrim	Flow press.prim.	Flow pressure sensor primary
PRtrnPrim	Return press.prim.	Return pressure sensor primary
PFISec	Flow press.sec.	Flow pressure sensor secondary
PRtrnSec	Return press.sec.	Return pressure sensor secondary
HDmdInA	Signal heat demand	Heat demand input analog (signal: f.e. DC 0…10 V)
HDmdInB	Command heat dem.	Heat demand input binary (ON/OFF)
PuSig	Signal pump	Pump signal
PuCmd	Command pump	Pump command (ON/OFF)
PuAlm	Alarm pump	Pump alarm
Pu2Sig	Signal pump 2	Pump signal 2
Pu2Cmd	Command pump 2	Pump command 2 (ON/OFF)
Pu2Alm	Alarm pump 2	Pump alarm 2
Vlv	Signal valve	Primary valve signal (signal: 0..10 V)
Vlv_3POpn	Open com.valve	Primary valve 3 point opening
Vlv_3PCls	Close com.valve	Primary valve 3 point closing
Vlv2	Signal valve 2	Primary valve 2 signal (signal: 0..10 V)
Vlv2_3POpn	Open com.valve 2	Primary valve 2, 3 point opening
Vlv2_3PCls	Close com.valve 2	Primary valve 2, 3 point closing
VlvCas	Shut off valve	Shut off valve cascade

Heating circuit 1 to 4

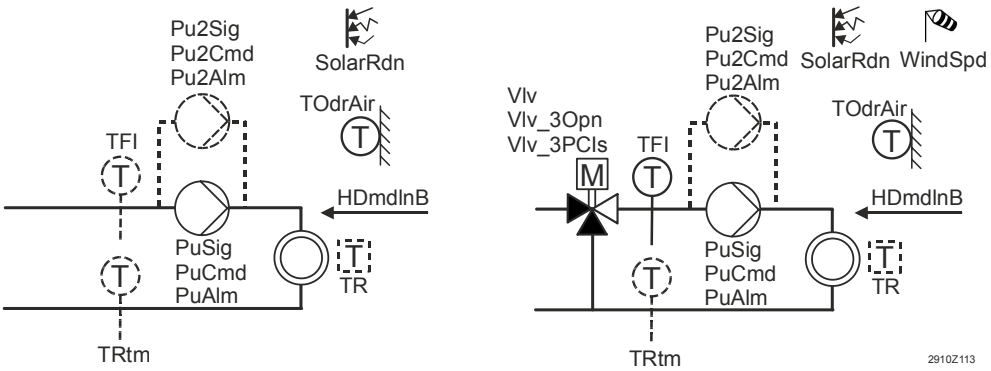

Scheme	HMI operation	Description
TOdrAir	Outside temp.	Outside temperature sensor
WindSpd	Wind speed	Wind speed sensor
SolarRdn	Solar radiation	Solar radiation sensor
TR	Room temperature	Room temperature sensor
TFl	Flow temperature	Flow temperature sensor
TRtrn	Return temperature	Return temperature sensor
HDmdInB	Thermostat	Heat demand input binary (ON/OFF)
PuSig	Signal pump	Pump signal continuous (signal 0..10 V)
PuCmd	Command pump	Pump command (ON/OFF)
PuAlm	Alarm pump	Pump alarm
Pu2Sig	Signal pump 2	Pump signal 2 continuous (signal 0..10 V)
Pu2Cmd	Command pump 2	Pump command 2 (ON/OFF)
Pu2Alm	Alarm pump 2	Pump alarm 2
Vlv	Signal valve	Primary valve continuous (signal 0..10 V)
Vlv_3POpn	Open com.valve	Primary valve 3 point opening
Vlv_3PCls	Close com.valve	Primary valve 3 point closing

Domestic hot water circuit with
internal heat exchanger

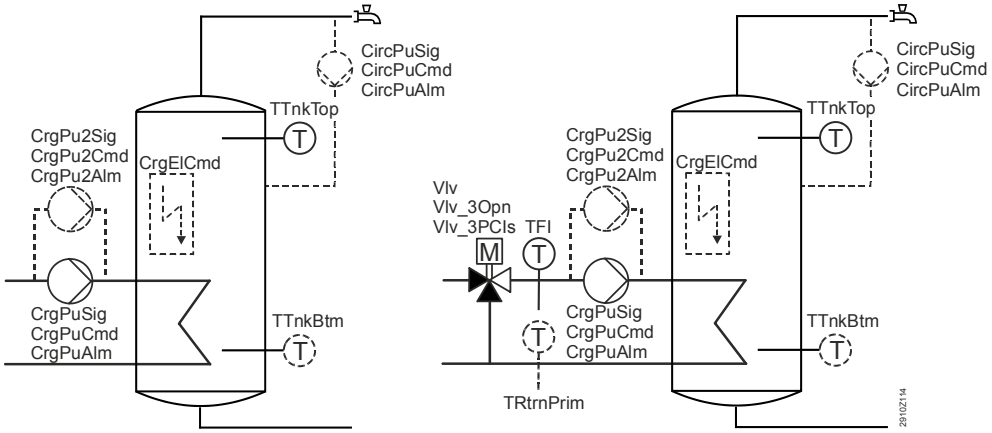

Scheme	HMI operation	Description
TFl	Flow temperature	Flow temperature sensor
TRtrnPrim	Return temp.prim.	Return temperature sensor primary
TTnkTop	Tank temp.top	Storage tank temperature sensor top
TTnkBtm	Tank temp.bottom	Storage tank temperature sensor bottom
CircPuSig	Signal circ.pump	Circulation pump signal
CircPuCmd	Command circ.pump	Circulation pump command (ON/OFF)
CircPuAlm	Alarm circ.pump	Circulation pump alarm
CrgPuSig	Signal charg.pump	Charging pump signal
CrgPuCmd	Command charg.pump	Charging pump command
CrgPuAlm	Alarm charg.pump	Charging pump alarm
CrgPu2Sig	Sign.charg.pump 2	Charging pump signal 2
CrgPu2Cmd	Com.charg.pump 2	Charging pump command 2
CrgPu2Alm	Alarm charg.pump 2	Charging pump alarm 2
Vlv	Signal valve	Primary valve signal (signal: 0..10 V)
Vlv_3POpn	Open com.valve	Primary valve 3 point opening
Vlv_3PCls	Close com.valve	Primary valve 3 point closing
CrgElCmd	Com.electr.charg.	Command electric immersion heater

Domestic hot water circuit with
external heat exchanger

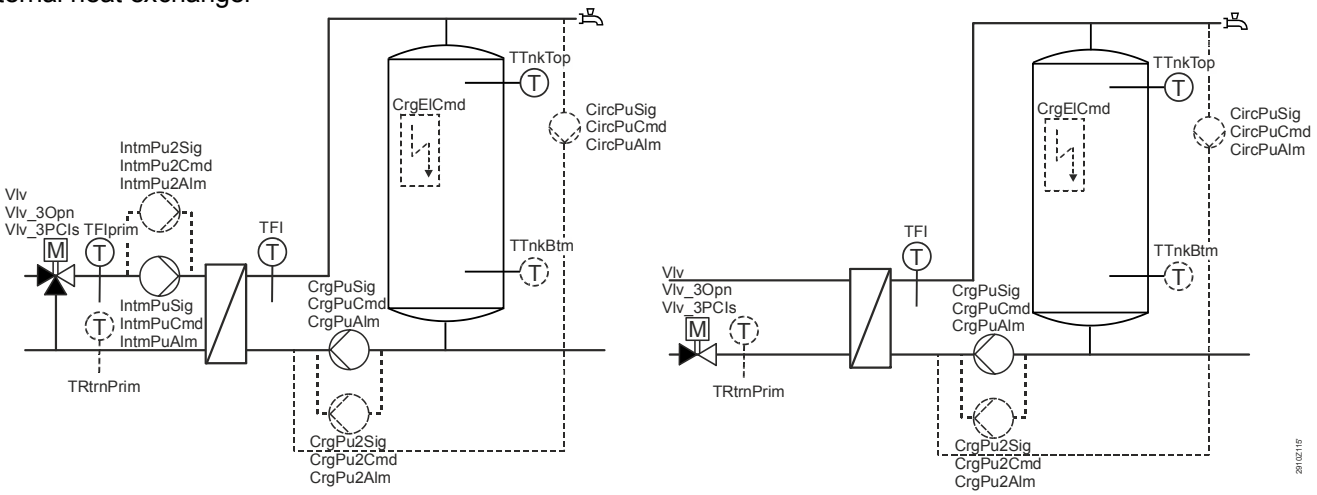

Scheme	HMI operation	Description
TFI	Flow temperature	Flow temperature sensor
TFIPrim	Flow temp.prim.	Flow temperature sensor primary
TRtrnPrim	Return temp.prim.	Return temperature sensor primary
TTnkTop	Tank temp.top	Storage tank temperature sensor top
TTnkBtm	Tank temp.bottom	Storage tank temperature sensor bottom
TraPuSig	Signal prim.pump	Intermediate pump signal
TraPuCmd	Command prim.pump	Intermediate pump command
TraPuAlm	Alarm prim.pump	Intermediate pump alarm
TraPu2Sig	Signal prim.pump 2	Intermediate pump signal 2
TraPu2Cmd	Com.prim.pump 2	Intermediate pump command 2
TraPu2Alm	Alarm prim.pump 2	Intermediate pump alarm 2
CircPuSig	Signal circ.pump	Circulation pump signal
CircPuCmd	Command circ.pump	Circulation pump command (ON/OFF)
CircPuAlm	Alarm circ.pump	Circulation pump alarm
CrgPuSig	Signal charg.pump	Charging pump signal
CrgPuCmd	Command charg.pump	Charging pump command
CrgPuAlm	Alarm charg.pump	Charging pump alarm
CrgPu2Sig	Sign.charg.pump 2	Charging pump signal 2
CrgPu2Cmd	Com.charg.pump 2	Charging pump command 2
CrgPu2Alm	Alarm charg.pump 2	Charging pump alarm 2
Vlv	Signal valve	Primary valve signal (signal: 0..10 V)
Vlv_3POpn	Open com.valve	Primary valve 3 point opening
Vlv_3PCls	Close com.valve	Primary valve 3 point closing
CrgElCmd	Com.electr.charg.	Command electric immersion heater

Domestic hot water circuit
without storage tank

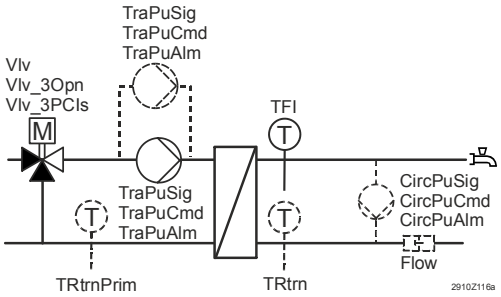

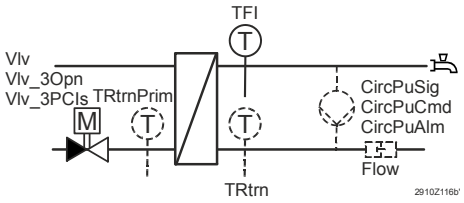

Scheme	HMI operation	Description
TFl	Flow temperature	Flow temperature sensor
TRtrn	Circ. temperature	Circulation or return temperature sensor
TRtrnPrim	Return temp.prim.	Return temperature sensor primary
Flow	Flow switch	Flow switch
CircPuSig	Signal circ.pump	Circulation pump signal
CircPuCmd	Command circ.pump	Circulation pump command (ON/OFF)
CircPuAlm	Alarm circ.pump	Circulation pump alarm
TraPuSig	Signal prim.pump	Intermediate pump signal
TraPuCmd	Command prim.pump	Intermediate pump command
TraPuAlm	Alarm prim.pump	Intermediate pump alarm
TraPu2Sig	Signal prim.pump 2	Intermediate pump signal 2
TraPu2Cmd	Com.prim.pump 2	Intermediate pump command 2
TraPu2Alm	Alarm prim.pump 2	Intermediate pump alarm 2
Vlv	Signal valve	Primary valve signal (signal: 0..10 V)
Vlv_3POpn	Open com.valve	Primary valve 3 point opening
Vlv_3PCls	Close com.valve	Primary valve 3 point closing

Solar

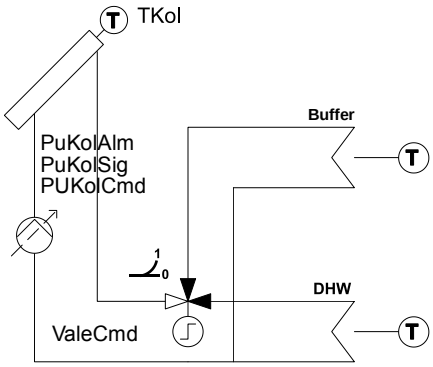

Scheme	HMI operation	Description
TKol	Collector temp	Collector temperature
	Flow temperature	To storage tank
	Return temperature	From storage tank
PuKolAlm	Alarm pump	Collector pump alarm
PuKolSig	Pump signal	Pump variable
PUKolCmd	Pump command	Pump on/off
ValeCmd	Valve	Valve (Up/Down or Buffer1/Buffer2)

Detailed information

See document CB1P2910en for a detailed description of Siemens District Heating application DH1 V1.2x.

BACnet objects

The set of loadable files mentioned above also includes a mapping file for integration in a higher building automation and control system via communications module. The Climatix controller automatically assumes the BACnet objects required for integration as per the plant data points and functions configured and parameterized previously.

The following tables list all BACnet objects supported by Siemens District Heating application DH1 V1.2x.

Only the objects for the activated functions and I/Os are present on BACnet.

3 BACnet objects of DH1 V1.2x

3.1 General

Purpose

This section describes the BACnet objects available in the specific application, see chapter 1.2 "Document validity" under "Validity".

Present objects

All present BACnet objects for the specific unit are found in the EDE files. See the integration guide how to export the EDE files.

3.2 BACnet object types

Overview

Special care must be taken to the BACnet standard and what object types and properties that are supported both on the Climatix and the client side.
This application supports the object types listed below:

Object type	Supported	Can be created dynamically	Can be deleted dynamically
Analog Input	☒	☐	☐
Analog Output	☒	☐	☐
Analog Value	☒	☐	☐
Binary Input	☒	☐	☐
Binary Output	☒	☐	☐
Binary Value	☐	☐	☐
Calendar	☒	☐	☐
Command	☐	☐	☐
Device	☒	☐	☐
Event Enrollment	☐	☐	☐
File	☐	☐	☐
Group	☐	☐	☐
Loop	☐	☐	☐
Multi-State Input	☒	☐	☐
Multi-State Output	☐	☐	☐
Multi-State Value	☒	☐	☐
Notification Class	☒	☐	☐
Program	☐	☐	☐
Schedule	☒	☐	☐
Averaging	☐	☐	☐
Trend Log	☒*	☐	☐
Life-Safety-Point	☐	☐	☐
Life-Safety-Zone	☐	☐	☐
Accumulator	☐	☐	☐
Pulse-Converter	☐	☐	☐

* Trend Log data are available and has to be configured by customer.

Description

See the following basic document for a detailed description of the individual object types: CB1P3939en "BACnet Protocol Implementation Conformance Statement (PICS)"

3.3 BACnet objects

Introduction

Normally either the object-name or the object-instance can be used as a BACnet reference.

Analog Inputs Type No: 0

Object name (Mapping 1)	Object instance	Object description	LOL	HIL	Dim.
CmnHtmFl	1101	Flow	0	1000	m3/h
CmnHtmHCap	1102	Power	0	1000	kW
CmnHtmHEg	1103	Cumulated energy	0	10'000'000	MWh
CmnHtmTFl	1104	Flow temp. heat meter	0	200	°C
CmnHtmTRt	1105	Return temp. h. meter	0	200	°C
CmnHtmVlm	1106	Cumulated volume	0	10'000'000	m3
CmnLmHtmHdw	1107	Pulse lim. heat meter	0	100	%
CmnPAx	1108	Auxiliary pressure	0	5000	kPa
CmnSr	1109	Solar radiation	0	5000	W/m2
CmnTAx	1110	Auxiliary temperature	0	200	°C
CmnTFlMn	1111	Main flow temperature	0	200	°C
CmnTOa	1112	Outside temperature	-75	75	°C
CmnWdSpd	1113	Wind speed	0	50	m/s
DW1InpTFl	31101	Flow temp. DW1	0	200	°C
DW1InpTFlPm	31102	Flow temp. prim. DW1	0	200	°C
DW1InpTRt	31103	Circulation temp. DW1	0	200	°C
DW1InpTRtPm	31104	Rt. temp. prim. DW1	0	200	°C
DW1InpTTnkBtm	31105	Tank temp. bot. DW1	0	200	°C
DW1InpTTnkTop	31106	Tank temp. top DW1	0	200	°C
DW2InpTFl	32101	Flow temp. DW2	0	200	°C
DW2InpTFlPm	32102	Flow temp. prim. DW2	0	200	°C
DW2InpTRt	32103	Circ. temp. DW2	0	200	°C
DW2InpTRtPm	32104	Return temp. prim. DW2	0	200	°C
DW2InpTTnkBtm	32105	Tank temp. bot. DW2	0	200	°C
DW2InpTTnkTop	32106	Tank temp. top DW2	0	200	°C
DW3InpTFl	33101	Flow temp. Stk	0	200	°C
DW3InpTFlPm	33102	Flow temp. prim. Stk	0	200	°C
DW3InpTRt	33103	Circ. temp. Stk	0	200	°C
DW3InpTRtPm	33104	Return temp. prim. Stk	0	200	°C
DW3InpTTnkBtm	33105	Tank temp. bot. Stk	0	200	°C
DW3InpTTnkTop	33106	Tank temp. top Stk	0	200	°C
HG1InpTFl	21101	Flow temp. HC1	0	200	°C
HG1InpTR	21102	Room temp. HC1	-75	75	°C
HG1InpTRt	21103	Return temp. HC1	0	0 - 200	°C
HG1InpTRUn	21104	Room unit temp. HC1	-75	75	°C
HG2InpTFl	22101	Flow temp. HC2	0	200	°C
HG2InpTR	22102	Room temp. HC2	-75	75	°C
HG2InpTRt	22103	Return temp. HC2	0	200	°C
HG2InpTRUn	22104	Room unit temp. HC2	-75	75	°C
HG3InpTFl	23101	Flow temp.HC3	0	200	°C
HG3InpTR	23102	Room temp.HC3	-75	75	°C
HG3InpTRt	23103	Return temp.HC3	0	200	°C
HG3InpTRUn	23104	Room unit temp. HC3	-75	75	°C
HG4InpTFl	24101	Flow temp.HC4	0	200	°C

Object name (Mapping 1)	Object instance	Object description	LOL	HIL	Dim.
HG4InpTR	24102	Room temp.HC4	-75	75	°C
HG4InpTRt	24103	Return temp.HC4	0	200	°C
HG4InpTRUn	24104	Room unit temp.HC4	-75	75	°C
PC1InpHDmdInA	11101	Signal Heat demand PC1	0	200	°C
PC1InpHtmFl	11102	Flow PC1	0	1000	m3/h
PC1InpHtmHCap	11103	Power PC1	0	1000	kW
PC1InpHtmHEg	11104	Cum. energy PC1	0	10'000'000	MWh
PC1InpHtmTFl	11105	Flow temp. heat meter PC1	0	200	°C
PC1InpHtmTRt	11106	Return temp. heat meter PC1	0	200	°C
PC1InpHtmVlm	11107	Cumulated volume PC1	0	10'000'000	m3
PC1InpPFlPm	11108	Flow pressure primary PC1	0	5000	kPa
PC1InpPFlSec	11109	Flow pressure secondary PC1	0	5000	kPa
PC1InpPRtPm	11110	Return pressure primary PC1	0	5000	kPa
PC1InpPRtSec	11111	Return press. secondary PC1	0	5000	kPa
PC1InpTFlSec	11112	Flow temp. secondary PC1	0	200	°C
PC1InpTRtPm	11113	Return temp. prim. PC1	0	200	°C
PC1InpTRtSec	11114	Return temp. sec. PC1	0	200	°C
PC2InpHDmdInA	12101	Signal heat demand PC2	0	200	°C
PC2InpHtmFl	12102	Flow heat meter PC2	0	1000	m3/h
PC2InpHtmHCap	12103	Power heat meter PC2	0	1000	kW
PC2InpHtmHEg	12104	Cum. energy heat meter PC2	0	10'000'000	MWh
PC2InpHtmTFl	12105	Flow temp. heat meter PC2	0	200	°C
PC2InpHtmTRt	12106	Return temp. heat meter PC2	0	200	°C
PC2InpHtmVlm	12107	Cumulated volume PC2	0	10'000'000	m3
PC2InpPFlPm	12108	Flow press. primary PC2	0	5000	kPa
PC2InpPFlSec	12109	Flow press. secondary PC2	0	5000	kPa
PC2InpPRtPm	12110	Return press. primary PC2	0	5000	kPa
PC2InpPRtSec	12111	Return press. secondary PC2	0	5000	kPa
PC2InpTFlSec	12112	Flow temp. sec. PC2	0	200	°C
PC2InpTRtPm	12113	Return temp. primary PC2	0	200	°C
PC2InpTRtSec	12114	Return temp. secondary PC2	0	200	°C
PC3InpHDmdInA	13101	Signal heat demand PC3	0	200	°C
PC3InpHtmFl	13102	Flow heat meter PC3	0	1000	m3/h
PC3InpHtmHCap	13103	Power heat meter PC3	0	1000	kW
PC3InpHtmHEg	13104	Cum. energy heat meter PC3	0	10'000'000	MWh
PC3InpHtmTFl	13105	Flow temp. heat meter PC3	0	200	°C
PC3InpHtmTRt	13106	Return temp. heat meter PC3	0	200	°C
PC3InpHtmVlm	13107	Cumulated volume PC3	0	10'000'000	m3
PC3InpPFlPm	13108	Flow press. primary PC3	0	5000	kPa
PC3InpPFlSec	13109	Flow press. secondary PC3	0	5000	kPa
PC3InpPRtPm	13110	Return press. primary PC3	0	5000	kPa
PC3InpPRtSec	13111	Return press. secondary PC3	0	5000	kPa
PC3InpTFlSec	13112	Flow temp. sec. PC3	0	200	°C
PC3InpTRtPm	13113	Return temp. primary PC3	0	200	°C
PC3InpTRtSec	13114	Return temp. secondary PC3	0	200	°C
Sol1InpTCol	41101	Collector temp. Sol1	-50	200	°C
Sol1InpTFl	41102	Flow temp. Sol1	-50	200	°C
Sol1InpTRt	41103	Return temp. Sol1	-50	200	°C
Sol2InpTCol	42101	Collector temp. Sol2	-50	200	°C
Sol2InpTFl	42102	Flow temp. Sol2	-50	200	°C
Sol2InpTRt	42103	Return temp. Sol2	-50	200	°C

Analog Outputs Type No: 1

Object name (Mapping 1)	Object instance	Object description	LOL	HIL	Dim.
CmnHDmdOutA	1301	Signal output heat demand	0	100	°C
DW1CirPuPos	31301	Signal circulation pump DW1	0	100	%
DW1CrgPu2Pos	31302	Signal charging pump 2 DW1	0	100	%
DW1CrgPuPos	31303	Signal charging pump DW1	0	100	%
DW1TraPu2Pos	31304	Signal primary pump 2 DW1	0	100	%
DW1TraPuPos	31305	Signal primary pump DW1	0	100	%
DW1VlvCtrPos	31306	Signal valve DW1	0	100	%
DW2CirPuPos	32301	Signal circulation pump DW2	0	100	%
DW2CrgPu2Pos	32302	Signal charging pump 2 DW2	0	100	%
DW2CrgPuPos	32303	Signal charging pump DW2	0	100	%
DW2TraPu2Pos	32304	Signal primary pump 2 DW2	0	100	%
DW2TraPuPos	32305	Signal primary pump DW2	0	100	%
DW2VlvCtrPos	32306	Signal valve DW2	0	100	%
DW3CirPuPos	33301	Signal circulation pump Stk	0	100	%
DW3CrgPu2Pos	33302	Signal charging pump 2 Stk	0	100	%
DW3CrgPuPos	33303	Signal charging pump Stk	0	100	%
DW3TraPu2Pos	33304	Signal primary pump 2 Stk	0	100	%
DW3TraPuPos	33305	Signal primary pump Stk	0	100	%
DW3VlvCtrPos	33306	Signal valve Stk	0	100	%
HG1Pu2Pos	21301	Signal pump 2 HC1	0	100	%
HG1PuPos	21302	Signal pump HC1	0	100	%
HG1VlvCtrPos	21303	Signal valve HC1	0	100	%
HG2Pu2Pos	22301	Signal pump 2 HC2	0	100	%
HG2PuPos	22302	Signal pump HC2	0	100	%
HG2VlvCtrPos	22303	Signal valve HC2	0	100	%
HG3Pu2Pos	23301	Signal pump 2 HC3	0	100	%
HG3PuPos	23302	Signal pump HC3	0	100	%
HG3VlvCtrPos	23303	Signal valve HC3	0	100	%
HG4Pu2Pos	24301	Signal pump 2 HC4	0	100	%
HG4PuPos	24302	Signal pump HC4	0	100	%
HG4VlvCtrPos	24303	Signal valve HC4	0	100	%
PC1Pu2Pos	11301	Signal pump 2 PC1	0	100	%
PC1PuPos	11302	Signal pump PC1	0	100	%
PC1VlvCtrPos	11303	Signal valve PC1	0	100	%
PC2Pu2Pos	12301	Signal pump 2 PC2	0	100	%
PC2PuPos	12302	Signal pump PC2	0	100	%
PC2VlvCtrPos	12303	Signal valve PC2	0	100	%
PC3Pu2Pos	13301	Signal pump 2 PC3	0	100	%
PC3PuPos	13302	Signal pump PC3	0	100	%
PC3VlvCtrPos	13303	Signal valve PC3	0	100	%
Sol1PuPos	41301	Command pump Sol1	0	100	%
Sol2PuPos	42301	Command pump Sol2	0	100	%

Analog Values Type No: 2

Object name (Mapping 1)	Object instance	Object description	LOL	HIL	Dim.
CmnFlLeakSupHG	1501	SP Flow leak supr. HC	0	50	%
CmnFlLeakSupPC	1502	SP Flow leak supr. PC	0	50	%
CmnHCnsMgtT0VHDmdOutA	1503	Temp.0V heat demand	-10	190	°C
CmnHCnsMgtT10VHDmdOutA	1504	Temp.10V heat demand	-10	190	°C
CmnHLm	1505	SP Heating limit	-10	30	°C
CmnKickSbyTi	1506	SP Kick standby time	0	2000	h
CmnKickTi	1507	SP Kick duration	0	200	s
CmnLimSpCapHtm	1508	SP Power limitation	0	1000	kW
CmnLimSpFlHtm	1509	SP Flow limitation	0	100	m3/h
CmnTDRBldgFr	1510	SP Room t.diff.build.frost	0	5	K
CmnTFlIcrLm	1511	SP Flow temp. incr. limit.	0	600	°C/m
CmnTiRunAx	1512	SP Runtime aux. output	0	200	h
CmnTmrAx	1513	SP Start aux. output	0	200	h
CmnTOaCalcBldgCon	1514	SP Building time constant	0	200	h
CmnTOaCalcSwCon	1515	SP Su/Wi time constant	0	200	h
CmnTOaCalcTOaFil	1516	Outside temp. filtered	-75	75	°C
CmnTOaCalcTOaFilSw	1517	Outside temp. Su/Wi filt.	-75	75	°C
CmnTOaLmPltFr	1518	SP Plant frost	-4	15	°C
CmnTRBldgPrt	1519	SP Building protection	0	40	°C
CmnTRtDhwLglMaxLm	1520	SP Max. lim. rt. t. leg. DW	-10	190	°C
CmnTRtDhwMaxLm	1521	SP Max.lim.rt.t.DW	-10	190	°C
CmnTRtRtcMaxLm	1522	SP Max. lim. rt. t. red.	-50	0	°C
DW1BstTFlSpHDmnd	31501	SP Boost heat dem. DW1	0	200	°C
DW1InpTFlDvnAlmMaxDvn	31502	SP Flow t. max. dev. DW1	0	50	K
DW1InpTFlPmDvnAlmMaxDvn	31503	SP Fl.t.prim.max.dev.DW1	0	50	K
DW1RmgLglIntrv	31504	Remain.leg.int.DW1	-20	20	Days
DW1SetLglHldTi	31505	SP Leg. hold time DW1	0	600	min
DW1SetLglIntvTi	31506	SP Leg. interval DW1	0	20	Days
DW1SpCirPuSpd	31507	SP Circ. pump DW1	0	100	%
DW1SpCrgPuSpd	31508	SP Char. pump DW1	0	100	%
DW1SpSbyRdc	31509	SP Fl. t. reduction DW1	0	100	%
DW1SpTraPuSpd	31510	SP Prim. pump DW1	0	100	%
DW2BstTFlSpHDmnd	32501	SP Boost heat dem. DW2	0	200	°C
DW2InpTFlDvnAlmMaxDvn	32502	SP Flow t. max. dev. DW2	0	50	K
DW2InpTFlPmDvnAlmMaxDvn	32503	SP Fl.t.prim.max.dev.DW2	0	50	K
DW2RmgLglIntrv	32504	Remain. leg. interval DW2	-20	20	Days
DW2SetLglHldTi	32505	SP Leg. hold time DW2	0	600	min
DW2SetLglIntvTi	32506	SP Leg. interval DW2	0	20	Days
DW2SpCirPuSpd	32507	SP Circ. pump.DW2	0	100	%
DW2SpCrgPuSpd	32508	SP Char. pump DW2	0	100	%
DW2SpSbyRdc	32509	SP flow t. reduction DW2	0	100	%
DW2SpTraPuSpd	32510	SP Prim. pump DW2	0	100	%
DW3BstTFlSpHDmnd	33501	SP Boost heat dem. Stk	0	200	°C
DW3InpTFlDvnAlmMaxDvn	33502	SP Flow t. max. dev. Sk	0	50	K
DW3InpTFlPmDvnAlmMaxDvn	33503	SP Fl.t.prim.max.dev.Stk	0	50	K
DW3RmgLglIntrv	33504	Remain. leg. interval Stk	-20	20	Days
DW3SetLglHldTi	33505	SP Leg. hold time Stk	0	600	min
DW3SetLglIntvTi	33506	SP Leg. interval Stk	0	20	Days
DW3SpCirPuSpd	33507	SP Circ. pump.Stk	0	100	%

Object name (Mapping 1)	Object instance	Object description	LOL	HIL	Dim.
DW3SpCrgPuSpd	33508	SP Char. pump Stk	0	100	%
DW3SpSbyRdc	33509	SP flow t. reduction Stk	0	100	%
DW3SpTraPuSpd	33510	SP Prim. pump Stk	0	100	%
HG1SetHCrvExpH	21507	Sp Radiator expon.HC1	1	1.5	
HG1SetHCrvSpcTFl	21508	SP Fl.temp.shift HC1	-10	10	K
HG1SetHCrvSpTFlDs	21509	SP Fl.t.design.h'curve HC1	25	130	°C
HG1SetHCrvTOaDs	21510	SP Outs.t.design HC1	-50	10	°C
HG1SetRInfl	21511	SP Room influence HC1	0	100	%
HG1SetSpShTRCmf	21512	SP Shift room.t.comf.HC1	-12	12	K
HG1SetSpShTREco	21513	SP Shift room.t.eco.HC1	-12	12	K
HG1SpPuSpd	21514	SP Pump speed HC1	0	100	%
HG1TDRMaxLm	21515	SP Room.t.diff.max.HC1	0	40	K
HG2BstTFlSpHDmnd	22501	SP Boost h.dem.HC2	0	200	°C
HG2InpTFlDvnAlmMaxDvn	22502	SP Max.dev.fl.t.HC2	0	50	K
HG2InpTRDvnAlmMaxDvn	22503	SP Room.t.max.dev.HC2	0	50	K
HG2InpTRtDvnAlmMaxDvn	22504	SP Rt.t.max.dev.HC2	0	50	K
HG2SetHCrvDTRSrNom	22505	SP Sol.rad.nominal HC2	0	20	K
HG2SetHCrvDTRWdNom	22506	SP W.speed nominal HC2	0	20	K
HG2SetHCrvExpH	22507	SP Radiator expon.HC2	1	1.5	
HG2SetHCrvSpcTFl	22508	SP Fl.temp.shift HC2	-10	10	K
HG2SetHCrvSpTFlDs	22509	SP Fl.t.design.h'curve HC2	25	130	°C
HG2SetHCrvTOaDs	22510	SP Outs.t.design HC2	-50	10	°C
HG2SetRInfl	22511	SP Room influence HC2	0	100	%
HG2SetSpShTRCmf	22512	SP Shift room.t.comf.HC2	-12	12	K
HG2SetSpShTREco	22513	SP Shift room.t.eco.HC2	-12	12	K
HG2SpPuSpd	22514	SP Pump speed HC2	0	100	%
HG2TDRMaxLm	22515	SP Room.t.diff.max.HC2	0	40	K
HG3BstTFlSpHDmnd	23501	SP Boost h.dem.HC3	0	200	°C
HG3InpTFlDvnAlmMaxDvn	23502	SP Max.dev.fl.t.HC3	0	50	K
HG3InpTRDvnAlmMaxDvn	23503	SP Room.t.max.dev.HC3	0	50	K
HG3InpTRtDvnAlmMaxDvn	23504	SP Rt.t.max.dev.HC3	0	50	K
HG3SetHCrvDTRSrNom	23505	SP Sol.rad.nominal HC3	0	20	K
HG3SetHCrvDTRWdNom	23506	SP W.speed nominal HC3	0	20	K
HG3SetHCrvExpH	23507	SP Radiator expon.HC3	1	1.5	
HG3SetHCrvSpcTFl	23508	SP Fl.temp.shift HC3	-10	10	K
HG3SetHCrvSpTFlDs	23509	SP Fl.t.design.h'curve HC3	25	130	°C
HG3SetHCrvTOaDs	23510	SP Outs.t.design HC3	-50	10	°C
HG3SetRInfl	23511	SP Room influence HC3	0	100	%
HG3SetSpShTRCmf	23512	SP Shift room.t.comf.HC3	-12	12	K
HG3SetSpShTREco	23513	SP Shift room.t.eco.HC3	-12	12	K
HG3SpPuSpd	23514	SP Pump speed HC3	0	100	%
HG3TDRMaxLm	23515	SP Room.t.diff.max.HC3	0	40	K
HG4BstTFlSpHDmnd	24501	SP Boost h.dem.HC4	0	200	°C
HG4InpTFlDvnAlmMaxDvn	24502	SP Max.dev.fl.t.HC4	0	50	K
HG4InpTRDvnAlmMaxDvn	24503	SP Room.t.max.dev.HC4	0	50	K
HG4InpTRtDvnAlmMaxDvn	24504	SP Rt.t.max.dev.HC4	0	50	K
HG4SetHCrvDTRSrNom	24505	SP Sol.rad.nominal HC4	0	20	K
HG4SetHCrvDTRWdNom	24506	SP W.speed nominal HC4	0	20	K
HG4SetHCrvExpH	24507	SP Radiator expon.HC4	1	1.5	
HG4SetHCrvSpcTFl	24508	SP Fl.temp.shift HC4	-10	10	K
HG4SetHCrvSpTFlDs	24509	SP Fl.t.design.h'curve HC4	25	130	°C

Object name (Mapping 1)	Object instance	Object description	LOL	HIL	Dim.
HG4SetHCrvTOaDs	24510	SP Outs.t.design HC4	-50	10	°C
HG4SetRInfl	24511	SP Room influence HC4	0	100	%
HG4SetSpShTRCmf	24512	SP Shift room.t.comf.HC4	-12	12	K
HG4SetSpShTREco	24513	SP Shift room.t.eco.HC4	-12	12	K
HG4SpPuSpd	24514	SP Pump speed HC4	0	100	%
HG4TDRMaxLm	24515	SP Room.t.diff.max.HC4	0	40	K
PC1BstTFlSpHDmnd	11501	SP Boost h.dem.PC1	0	200	°C
PC1InpDRTDvnAlmMaxDvn	11502	SP Max.dev.rt.t.diff.PC1	0	50	°C
PC1InpHLmHDmdInA	11503	SP Limit h.dem.PC1	-10	190	°C
PC1InpSpTFlHDmdFix	11504	SP Fl.t.SP h.dem.PC1	-10	190	°C
PC1InpTFlSecDvnAlmMaxDvn	11505	SP Max.dev.fl.t.sec.PC1	0	50	K
PC1LimSpCapHtm	11506	SP Power lim.PC1	0	1000	kW
PC1LimSpDRT	11507	SP Lim.rt.temp.diff.PC1	0	50	K
PC1LimSpFlHtm	11508	SP Flow limit.PC1	0	100	m3/h
PC1SpFixVarPu	11509	SP Pump PC1	0	100	%
PC1SpPVarPu	11510	SP Pump PC1	0	5000	kPa
PC1RefilDisTi	11511	SP Disable time PC1	0	2400	min
PC1RefilDlyLowP	11512	SP Delay Low press. PC1	0	2400	s
PC1RefilMinOnTi	11513	SP Min. on time PC1	0	2400	s
PC2BstTFlSpHDmnd	12501	SP Boost h.dem.PC2	0	200	°C
PC2InpDRTDvnAlmMaxDvn	12502	SP Max.dev.rt.t.diff.PC2	0	50	°C
PC2InpHLmHDmdInA	12503	SP Limit h.dem.PC2	-10	190	°C
PC2InpSpTFlHDmdFix	12504	SP Fl.t.SP h.dem.PC2	-10	190	°C
PC2InpTFlSecDvnAlmMaxDvn	12505	SP Max.dev.fl.t.sec.PC2	0	50	K
PC2LimSpCapHtm	12506	SP Power lim.PC2	0	1000	kW
PC2LimSpDRT	12507	SP Lim.rt.temp.diff.PC2	0	50	K
PC2LimSpFlHtm	12508	SP Flow limit.PC2	0	100	m3/h
PC2SpFixVarPu	12509	SP Pump PC2	0	100	%
PC2SpPVarPu	12510	SP Pump PC2	0	5000	kPa
PC2RefilDisTi	12511	SP Disable time PC2	0	2400	min
PC2RefilDlyLowP	12512	SP Delay Low press. PC2	0	2400	s
PC2RefilMinOnTi	12513	SP Min. on time PC2	0	2400	s
PC3BstTFlSpHDmnd	13501	SP Boost h.dem.PC3	0	200	°C
PC3InpDRTDvnAlmMaxDvn	13502	SP Max.dev.rt.t.diff.PC3	0	50	°C
PC3InpHLmHDmdInA	13503	SP Limit h.dem.PC3	-10	190	°C
PC3InpSpTFlHDmdFix	13504	SP Fl.t.SP h.dem.PC3	-10	190	°C
PC3InpTFlSecDvnAlmMaxDvn	13505	SP Max.dev.fl.t.sec.PC3	0	50	K
PC3LimSpCapHtm	13506	SP Power lim.PC3	0	1000	kW
PC3LimSpDRT	13507	SP Lim.rt.temp.diff.PC3	0	50	K
PC3LimSpFlHtm	13508	SP Flow limit.PC3	0	100	m3/h
PC3SpFixVarPu	13509	SP Pump PC3	0	100	%
PC3SpPVarPu	13510	SP Pump PC3	0	5000	kPa
PC3RefilDisTi	13511	SP Disable time PC3	0	2400	min
PC3RefilDlyLowP	13512	SP Delay Low press. PC3	0	2400	s
PC3RefilMinOnTi	13513	SP Min. on time PC3	0	2400	s
Sol1SetPuSpdMax	41501	SP Pump max. speed Sol1	0	100	%
Sol1SetPuSpdMin	41502	SP Pump min. speed Sol1	0	100	%
Sol1SetTColPuSpd	41503	SP Pu. spe. col.temp Sol1	0	200	°C
Sol1SetTStoMax	41504	SP Max temp. stor Sol1	0	200	°C
Sol1SetTStoNom	41505	SP Min temp. stor Sol1	0	200	°C
Sol1SetTColEvap	41506	SP Evap. temp. col. Sol1	0	200	°C

Object name (Mapping 1)	Object instance	Object description	LOL	HIL	Dim.
Sol1SetTColPrt	41507	SP Prot. temp. col. Sol1	0	200	°C
Sol1SetTColFr	41508	SP Frost temp. col. Sol1	-50	10	°C
Sol1SetMinTCol	41509	SP Min start temp. col. Sol1	0	80	°C
Sol1SetGrdnt	41510	SP Gradient start temp Sol1	0	20	Min/K
Sol1SetVlvSpIcr	41511	SP Increment start Sol1	0	20	°C
Sol1SetDlyOnTi	41512	SP Delay on time Sol1	0	5000	s
Sol1SetRunTiBot	41513	SP Run time TBot Sol1	0	1000	min
Sol1Pu.CmdFbStupDly	41514	SP Pump delay Sol1	0	3600	s
Sol1PuDlyOffDlyOff	41515	SP Pump delay off Sol1	0	3600	s
Sol2SetPuSpdMax	42501	SP Pump max. speed Sol2	0	100	%
Sol2SetPuSpdMin	42502	SP Pump min. speed Sol2	0	100	%
Sol2SetTColPuSpd	42503	SP Pu. spe. col.temp Sol2	0	200	°C
Sol2SetTStoMax	42504	SP Max temp. stor Sol2	0	200	°C
Sol2SetTStoNom	42505	SP Min temp. stor Sol2	0	200	°C
Sol2SetTColEvap	42506	SP Evap. temp. col. Sol2	0	200	°C
Sol2SetTColPrt	42507	SP Prot. temp. col. Sol2	0	200	°C
Sol2SetTColFr	42508	SP Frost temp. col. Sol2	-50	10	°C
Sol2SetMinTCol	42509	SP Min start temp. col. Sol2	0	80	°C
Sol2SetGrdnt	42510	SP Gradient start temp Sol2	0	20	Min/K
Sol2SetVlvSpIcr	42511	SP Increment start Sol2	0	20	°C
Sol2SetDlyOnTi	42512	SP Delay on time Sol2	0	5000	s
Sol2SetRunTiBot	2513	SP Run time TBot Sol2	0	1000	min
Sol2Pu.CmdFbStupDly	42514	SP Pump delay Sol2	0	3600	s
Sol2PuDlyOffDlyOff	42515	SP Pump delay off Sol2	0	3600	s
CmnLimTRtInHi	1551	SP Outs.t.high rt.t.lim.	-75	200	°C
CmnLimTRtInLo	1552	SP Outs.t.low rt.t.lim.	-75	200	°C
CmnLimTRtOutHi	1553	Sp Temp.high rt.t.lim.	-75	200	°C
CmnLimTRtOutLo	1554	SP Temp low rt.t.lim.	-75	200	°C
CmnLmHtmHdw0%	1555	SP Pulse lim.h.meter 0%	0	1500	pls/m
CmnLmHtmHdw100%	1556	SP Pulse lim.h.met.100%	0	1500	pls/m
CmnPmCondInHi	1557	SP Aux.t.high DW valve	-75	200	°C
CmnPmCondInLo	1558	SP Aux.t.low DW valve	-75	200	°C
CmnPmCondOutHi	1559	SP Signal high DW valve	-75	200	%
CmnPmCondOutLo	1560	SP Signal low DW valve	-75	200	%
DW1SetMaxCrgTi	31551	SP Max.char.time DW1	0	600	min
DW1SetMinCrgTi	31552	SP Min.char.time DW1	0	600	min
DW1SetSpTFlBst	31553	SP Fl.t.boost DW1	0	20	K
DW1SetSpTHysNrml	31554	SP Hys.normal DW1	0	20	K
DW1SetSpTHysRdc	31555	SP Hys.reduced DW1	0	20	K
DW1SetSpTLgl	31556	SP Legion.temp.DW1	0	200	°C
DW1SetSpTLglHys	31557	SP Hys.legion.DW1	0	20	K
DW1SetSpTNrml	31558	SP Temp.normal DW1	0	200	°C
DW1SetSpTRdc	31559	SP Temp.reduced DW1	0	200	°C
DW2SetMaxCrgTi	32551	SP Max.char.time DW2	0	600	min
DW2SetMinCrgTi	32552	SP Min.char.time DW2	0	600	min
DW2SetSpTFlBst	32553	SP Fl.t.boost DW2	0	20	K
DW2SetSpTHysNrml	32554	SP Hys.normal DW2	0	20	K
DW2SetSpTHysRdc	32555	SP Hys.reduced DW2	0	20	K
DW2SetSpTLgl	32556	SP Legion.temp.DW2	0	200	°C
DW2SetSpTLglHys	32557	SP Hys.legion.DW2	0	20	K
DW2SetSpTNrml	32558	SP Temp.normal DW2	0	200	°C

Object name (Mapping 1)	Object instance	Object description	LOL	HIL	Dim.
DW2SetSpTRdc	32559	SP Temp.reduced DW2	0	200	°C
DW3SetMaxCrgTi	32551	SP Max.char.time Stk	0	600	min
DW3SetMinCrgTi	32552	SP Min.char.time Stk	0	600	min
DW3SetSpTFlBst	32553	SP Fl.t.boost Stk	0	20	K
DW3SetSpTHysNrml	32554	SP Hys.normal Stk	0	20	K
DW3SetSpTHysRdc	32555	SP Hys.reduced Stk	0	20	K
DW3SetSpTLgl	32556	SP Legion.temp.Stk	0	200	°C
DW3SetSpTLglHys	32557	SP Hys.legion.Stk	0	20	K
DW3SetSpTNrml	32558	SP Temp.normal Stk	0	200	°C
DW3SetSpTRdc	32559	SP Temp.reduced Stk	0	200	°C
HG1SetHCrvSpTFlTOaHi	21551	SP Fl.t.high h'curve HC1	0	130	°C
HG1SetHCrvTOaHi	21552	SP Outs.t.high h'curve HC1	-75	200	°C
HG1SetSpTFlMax	21553	SP Fl.temp.max.HC1	0	200	°C
HG1SetSpTFlMin	21554	SP Fl.temp.min.HC1	0	200	°C
HG1SetSpTRCmf	21555	SP Room temp.comf.HC1	0	50	°C
HG1SetSpTREco	21556	SP Room temp.eco.HC1	0	50	°C
HG2SetHCrvSpTFlTOaHi	22551	SP Fl.t.high h'curve HC2	0	130	°C
HG2SetHCrvTOaHi	22552	SP Outs.t.high h'curve HC2	-75	200	°C
HG2SetSpTFlMax	22553	SP Fl.temp.max.HC2	0	200	°C
HG2SetSpTFlMin	22554	SP Fl.temp.min.HC2	0	200	°C
HG2SetSpTRCmf	22555	SP Room temp.comf.HC2	0	50	°C
HG2SetSpTREco	22556	SP Room temp.eco.HC2	0	50	°C
HG3SetHCrvSpTFlTOaHi	23551	SP Fl.t.high h'curve HC3	0	130	°C
HG3SetHCrvTOaHi	23552	SP Outs.t.high h'curve HC3	-75	200	°C
HG3SetSpTFlMax	23553	SP Fl.temp.max.HC3	0	200	°C
HG3SetSpTFlMin	23554	SP Fl.temp.min.HC3	0	200	°C
HG3SetSpTRCmf	23555	SP Room temp.comf.HC3	0	50	°C
HG3SetSpTREco	23556	SP Room temp.eco.HC3	0	50	°C
HG4SetHCrvSpTFlTOaHi	24551	SP Fl.t.high h'curve HC4	0	130	°C
HG4SetHCrvTOaHi	24552	SP Outs.t.high h'curve HC4	-75	200	°C
HG4SetSpTFlMax	24553	SP Fl.temp.max.HC4	0	200	°C
HG4SetSpTFlMin	24554	SP Fl.temp.min.HC4	0	200	°C
HG4SetSpTRCmf	24555	SP Room temp.comf.HC4	0	50	°C
HG4SetSpTREco	24556	SP Room temp.eco.HC4	0	50	°C
PC1InpTFlHDmdInHi	11551	SP Outs.t.high h'dem.PC1	-75	200	°C
PC1InpTFlHDmdInLo	11552	SP Outs.t.low h'dem.PC1	-75	200	°C
PC1InpTFlHDmdOutHi	11553	SP Fl.t.high h'dem.PC1	-75	200	°C
PC1InpTFlHDmdOutLo	11554	SP Fl.t.low h'dem.PC1	-75	200	°C
PC1InpTFlMaxLmHDmnd	11555	SP Fl.t.max.lim.h'dem.PC1	-10	190	°C
PC1InpTFlMinLmHDmnd	11556	SP Fl.t.min.lim.h'dem.PC1	0	200	°C
PC1SpPHiRefil	11557	SP Press.off refill PC1	0	5000	kPa
PC1SpPLoRefil	11558	SP Press.on refill PC1	0	5000	kPa
PC2InpTFlHDmdInHi	12551	SP Outs.t.high h'dem.PC2	-75	200	°C
PC2InpTFlHDmdInLo	12552	SP Outs.t.low h'dem.PC2	-75	200	°C
PC2InpTFlHDmdOutHi	12553	SP Fl.t.high h'dem.PC2	-75	200	°C
PC2InpTFlHDmdOutLo	12554	SP Fl.t.low h'dem.PC2	-75	200	°C
PC2InpTFlMaxLmHDmnd	12555	SP Fl.t.max.lim.h'dem.PC2	-10	190	°C
PC2InpTFlMinLmHDmnd	12556	SP Fl.t.min.lim.h'dem.PC2	0	200	°C
PC2SpPHiRefil	12557	SP Press.off refill PC2	0	5000	kPa
PC2SpPLoRefil	12558	SP Press.on refill PC2	0	5000	kPa
PC3InpTFlHDmdInHi	13551	SP Outs.t.high h'dem.PC3	-75	200	°C

Object name (Mapping 1)	Object instance	Object description	LOL	HIL	Dim.
PC3InpTFlHDmdInLo	13552	SP Outs.t.low h'dem.PC3	-75	200	°C
PC3InpTFlHDmdOutHi	13553	SP Fl.t.high h'dem.PC3	-75	200	°C
PC3InpTFlHDmdOutLo	13554	SP Fl.t.low h'dem.PC3	-75	200	°C
PC3InpTFlMaxLmHDmnd	13555	SP Fl.t.max.lim.h'dem.PC3	-10	190	°C
PC3InpTFlMinLmHDmnd	13556	SP Fl.t.min.lim.h'dem.PC3	0	200	°C
PC3SpPHiRefil	13557	SP Press.off refill PC3	0	5000	kPa
PC3SpPLoRefil	13558	SP Press.on refill PC3	0	5000	kPa
Sol1SetTReCTop	41551	SP Recooling temp top. Sol1	0	200	°C
Sol1SetTReCBtm	41552	SP Recooling temp bot. Sol1	0	200	°C
Sol1SetdTOn	41553	SP Delta temp on Sol1	0	50	°C
Sol1SetdTOff	41554	SP Delta temp off Sol1	0	50	°C
Sol2SetTReCTop	42551	SP Recooling temp top. Sol2	0	200	°C
Sol2SetTReCBtm	42552	SP Recooling temp bot. Sol2	0	200	°C
Sol2SetdTOn	42553	SP Delta temp on Sol2	0	50	°C
Sol2SetdTOff	42554	SP Delta temp off Sol2	0	50	°C
CmnHCnsMgtHDmdPcVal	1701	Heat demand value			°C
CmnLimTRtMax	1702	Return temp.limit.	0	200	°C
CmnMtrAx1KWh	1703	Auxiliary meter 1	0	4'000'000'000	kWh
CmnMtrAx1m3	1704	Auxiliary meter 1	0	4'000'000'000	m3
CmnMtrAx1MWh	1705	Auxiliary meter 1	0	4'000'000'000	MWh
CmnMtrAx2KWh	1706	Auxiliary meter 2	0	4'000'000'000	kWh
CmnMtrAx2m3	1707	Auxiliary meter 2	0	4'000'000'000	m3
CmnMtrAx2MWh	1708	Auxiliary meter 2	0	4'000'000'000	MWh
CmnMtrAx3KWh	1709	Auxiliary meter 3	0	4'000'000'000	kWh
CmnMtrAx3m3	1710	Auxiliary meter 3	0	4'000'000'000	m3
CmnMtrAx3MWh	1711	Auxiliary meter 3	0	4'000'000'000	MWh
CmnMtrAx4KWh	1712	Auxiliary meter 4	0	4'000'000'000	kWh
CmnMtrAx4m3	1713	Auxiliary meter 4	0	4'000'000'000	MWh
CmnMtrAx4MWh	1714	Auxiliary meter 4	0	4'000'000'000	MWh
DW1SpTFl	31701	Act.fl.t.setp.DW1	-10	190	°C
DW1ValLm	31702	Act.limitation DW1	0	100	%
DW1VlvSetDstrn	31703	Dist.valve DW1	0	50	%
DW2SpTFl	31704	Act.fl.t.setp.DW2	-10	190	°C
DW2ValLm	31705	Act.limitation DW2	0	100	%
DW2VlvSetDstrn	31706	Dist.valve DW2	0	50	%
DW3SpTFl	31704	Act.fl.t.setp.Stk	-10	190	°C
DW3ValLm	31705	Act.limitation Stk	0	100	%
DW3VlvSetDstrn	31706	Dist.valve Stk	0	50	%
HG1InpTRMx	21701	Act.room temp.HC1	-75	-75 - 75	°C
HG1SetHCrvSpTFl	21702	Fl.t.setp.curve HC1	-70	-70 - 70	°C
HG1SetHCrvSpTFlBp	21703	Breakp.fl.t.H.curve HC1	-70	-70 - 70	°C
HG1SetHCrvTOaBase	21704	Base outs.t.H.curve HC1	-70	70	°C
HG1SetHCrvTOaBp	21705	Breakp.outs.t.h.curve HC1	-70	70	°C
HG1SetSpTRAct	21706	Act.room setp.HC1	0	150	°C
HG1SetSpVal	21707	Act.fl.t.setp.HC1	0	150	°C
HG1ValLm	21708	Act.limitation HC1	0	100	%
HG1VlvSetDstrn	21709	Dist.valve HC1	0	0 - 50	%
HG2InpTRMx	22701	Act.room temp.HC2	-75	-75 - 75	°C
HG2SetHCrvSpTFl	22702	Fl.t.setp.curve HC2	-70	-70 - 70	°C
HG2SetHCrvSpTFlBp	22703	Breakp.fl.t.H.curve HC2	-70	-70 - 70	°C
HG2SetHCrvTOaBase	22704	Base outs.t.H.curve HC2	-70	-70 - 70	°C

Object name (Mapping 1)	Object instance	Object description	LOL	HIL	Dim.
HG2SetHCrvTOaBp	22705	Breakp.outs.t.h.curve HC2	-70	-70 - 70	°C
HG2SetSpTRAct	22706	Act.room setp.HC2	0	150	°C
HG2SetSpVal	22707	Act.fl.t.setp.HC2	0	150	°C
HG2ValLm	22708	Act.limitation HC2	0	100	%
HG2VlvSetDstrn	22709	Dist.valve HC2	0	50	%
HG3InpTRMx	23701	Act.room temp.HC3	-75	75	°C
HG3SetHCrvSpTFl	23702	Fl.t.setp.curve HC3	-70	70	°C
HG3SetHCrvSpTFlBp	23703	Breakp.fl.t.H.curve HC3	-70	70	°C
HG3SetHCrvTOaBase	23704	Base outs.t.H.curve HC3	-70	70	°C
HG3SetHCrvTOaBp	23705	Breakp.outs.t.h.curve HC3	-70	70	°C
HG3SetSpTRAct	23706	Act.room setp.HC3	0	150	°C
HG3SetSpVal	23707	Act.fl.t.setp.HC3	0	150	°C
HG3ValLm	23708	Act.limitation HC3	0	100	%
HG3VlvSetDstrn	23709	Dist.valve HC3	0	50	%
HG4InpTRMx	24701	Act.room temp.HC4	-75	75	°C
HG4SetHCrvSpTFl	24702	Fl.t.setp.curve HC4	-70	70	°C
HG4SetHCrvSpTFlBp	24703	Breakp.fl.t.H.curve HC4	-70	70	°C
HG4SetHCrvTOaBase	24704	Base outs.t.H.curve HC4	-70	70	°C
HG4SetHCrvTOaBp	24705	Breakp.outs.t.h.curve HC4	-70	70	°C
HG4SetSpTRAct	24706	Act.room setp.HC4	0	150	°C
HG4SetSpVal	24707	Act.fl.t.setp.HC4	0	150	°C
HG4ValLm	24708	Act.limitation HC4	0	100	%
HG4VlvSetDstrn	24709	Dist.valve HC4	0	50	%
PC1InpDRT	11701	Rt.temp.diff.PC1	0	50	K
PC1InpFlRefilVlm	11702	Volume refill PC1	0	4'000'000'000	m3
PC1LimVal	11703	Act.limitation PC1	0	100	%
PC1SpTFl	11704	Act.fl.t.setp.PC1	-10	190	°C
PC1VlvSetDstrn	11705	Dist.valve PC1	0	50	%
PC1Vlv2SetDstrn	11706	Dist.valve 2 PC1	0	50	%
PC2InpDRT	12701	Rt.temp.diff.PC2	0	50	K
PC2InpFlRefilVlm	12702	Volume refill PC2	0	4'000'000'000	m3
PC2LimVal	12703	Act.limitation PC2	0	100	%
PC2SpTFl	12704	Act.fl.t.setp.PC2	-10	190	°C
PC2VlvSetDstrn	12705	Dist.valve PC2	0	50	%
PC2Vlv2SetDstrn	12706	Dist.valve 2 PC2	0	50	%
PC3InpDRT	13701	Rt.temp.diff.PC3	0	50	K
PC3InpFlRefilVlm	13702	Volume refill PC3	0	4'000'000'000	m3
PC3LimVal	13703	Act.limitation PC3	0	100	%
PC3SpTFl	13704	Act.fl.t.setp.PC3	-10	190	°C
PC3VlvSetDstrn	13705	Dist.valve PC3	0	50	%
PC3Vlv2SetDstrn	13706	Dist.valve 2 PC3	0	50	%
CmnFlHtmLmCtrLoopKp	1801	Control flow lim. Kp	0.0	20.0	
CmnFlHtmLmCtrLoopTI	1802	Control flow lim. Ti	0.0	1000.0	s
CmnFlHtmLmCtrLoopTD	1803	Control flow lim. TD	0.0	1000.0	s
CmnCapHtmLmCtrLoopKp	1804	Control Htm power lim. Kp	0.0	20.0	
CmnCapHtmLmCtrLoopTI	1805	Control Htm power lim. Ti	0.0	1000.0	s
CmnCapHtmLmCtrLoopTD	1806	Control Htm power lim. TD	0.0	1000.0	s
CmnPwrLmCtrLoopKp	1807	Control power lim. Kp	0.0	20.0	
CmnPwrLmCtrLoopTI	1808	Control power lim. Ti	0.0	1000.0	s
CmnPwrLmCtrLoopTD	1809	Control power lim. TD	0.0	1000.0	s
HG1VlvCtrLoopKp	21801	Control valve. Kp HC1	0.0	20.0	

Object name (Mapping 1)	Object instance	Object description	LOL	HIL	Dim.
HG1VlvCtrLoopTI	21802	Control valve. Ti HC1	0.0	1000.0	s
HG1VlvCtrLoopTD	21803	Control valve. TD HC1	0.0	1000.0	s
HG2VlvCtrLoopKp	22801	Control valve. Kp HC2	0.0	20.0	
HG2VlvCtrLoopTI	22802	Control valve. Ti HC2	0.0	1000.0	s
HG2VlvCtrLoopTD	22803	Control valve. TD HC2	0.0	1000.0	s
HG3VlvCtrLoopKp	23801	Control valve. Kp HC3	0.0	20.0	
HG3VlvCtrLoopTI	23802	Control valve. Ti HC3	0.0	1000.0	s
HG3VlvCtrLoopTD	23803	Control valve. TD HC3	0.0	1000.0	s
HG4VlvCtrLoopKp	24801	Control valve. Kp HC4	0.0	20.0	
HG4VlvCtrLoopTI	24802	Control valve. Ti HC4	0.0	1000.0	s
HG4VlvCtrLoopTD	24803	Control valve. TD HC4	0.0	1000.0	s
PC1VlvCtrLoopKp	11801	Control valve. Kp PC1	0.0	20.0	
PC1VlvCtrLoopTI	11802	Control valve. Ti PC1	0.0	1000.0	s
PC1VlvCtrLoopTD	11803	Control valve. TD PC1	0.0	1000.0	s
PC1TRtLmCtrLoopKp	11807	Contr.rt.temp.lim. Kp PC1	0.0	20.0	
PC1TRtLmCtrLoopTI	11808	Contr.rt.temp.lim. Ti PC1	0.0	1000.0	s
PC1TRtLmCtrLoopTD	11809	Contr.rt.temp.lim. TD PC1	0.0	1000.0	s
PC1DRTLmCtrLoopKp	11810	Contr.rt.temp.diff. Kp PC1	0.0	20.0	
PC1DRTLmCtrLoopTI	11811	Contr.rt.temp.diff. Ti PC1	0.0	1000.0	s
PC1DRTLmCtrLoopTD	11812	Contr.rt.temp.diff. TD PC1	0.0	1000.0	s
PC1FlHtmLmCtrLoopKp	11813	Control power lim. Kp PC1	0.0	20.0	
PC1FlHtmLmCtrLoopTI	11814	Control power lim. Ti PC1	0.0	1000.0	s
PC1FlHtmLmCtrLoopTD	11815	Control power lim. TD PC1	0.0	1000.0	s
PC1CapHtmLmCtrLoopKp	11816	Control power lim. Kp PC1	0.0	20.0	
PC1CapHtmLmCtrLoopTI	11817	Control power lim. Ti PC1	0.0	1000.0	s
PC1CapHtmLmCtrLoopTD	11818	Control power lim. TD PC1	0.0	1000.0	s
PC2VlvCtrLoopKp	12801	Control valve. Kp PC2	0.0	20.0	
PC2VlvCtrLoopTI	12802	Control valve. Ti PC2	0.0	1000.0	s
PC2VlvCtrLoopTD	12803	Control valve. TD PC2	0.0	1000.0	s
PC2TRtLmCtrLoopKp	12807	Contr.rt.temp.lim. Kp PC2	0.0	20.0	
PC2TRtLmCtrLoopTI	12808	Contr.rt.temp.lim. Ti PC2	0.0	1000.0	s
PC2TRtLmCtrLoopTD	12809	Contr.rt.temp.lim. TD PC2	0.0	1000.0	s
PC2DRTLmCtrLoopKp	12810	Contr.rt.temp.diff. Kp PC2	0.0	20.0	
PC2DRTLmCtrLoopTI	12811	Contr.rt.temp.diff. Ti PC2	0.0	1000.0	s
PC2DRTLmCtrLoopTD	12812	Contr.rt.temp.diff. TD PC2	0.0	1000.0	s
PC2FlHtmLmCtrLoopKp	12813	Control power lim. Kp PC2	0.0	20.0	
PC2FlHtmLmCtrLoopTI	12814	Control power lim. Ti PC2	0.0	1000.0	s
PC2FlHtmLmCtrLoopTD	12815	Control power lim. TD PC2	0.0	1000.0	s
PC2CapHtmLmCtrLoopKp	12816	Control power lim. Kp PC2	0.0	20.0	
PC2CapHtmLmCtrLoopTI	12817	Control power lim. Ti PC2	0.0	1000.0	s
PC2CapHtmLmCtrLoopTD	12818	Control power lim. TD PC2	0.0	1000.0	s
PC3VlvCtrLoopKp	13801	Control valve. Kp PC3	0.0	20.0	
PC3VlvCtrLoopTI	13802	Control valve. Ti PC3	0.0	1000.0	s
PC3VlvCtrLoopTD	13803	Control valve. TD PC3	0.0	1000.0	s
PC3TRtLmCtrLoopKp	13807	Contr.rt.temp.lim. Kp PC3	0.0	20.0	
PC3TRtLmCtrLoopTI	13808	Contr.rt.temp.lim. Ti PC3	0.0	1000.0	s
PC3TRtLmCtrLoopTD	13809	Contr.rt.temp.lim. TD PC3	0.0	1000.0	s
PC3DRTLmCtrLoopKp	13810	Contr.rt.temp.diff. Kp PC3	0.0	20.0	
PC3DRTLmCtrLoopTI	13811	Contr.rt.temp.diff. Ti PC3	0.0	1000.0	s
PC3DRTLmCtrLoopTD	13812	Contr.rt.temp.diff. TD PC3	0.0	1000.0	s
PC3FlHtmLmCtrLoopKp	13813	Control power lim. Kp PC3	0.0	20.0	

Object name (Mapping 1)	Object instance	Object description	LOL	HIL	Dim.
PC3FlHtmLmCtrLoopTI	13814	Control power lim. Ti PC3	0.0	1000.0	s
PC3FlHtmLmCtrLoopTD	13815	Control power lim. TD PC3	0.0	1000.0	s
PC3CapHtmLmCtrLoopKp	13816	Control power lim. Kp PC3	0.0	20.0	
PC3CapHtmLmCtrLoopTI	13817	Control power lim. Ti PC3	0.0	1000.0	s
PC3CapHtmLmCtrLoopTD	13818	Control power lim. TD PC3	0.0	1000.0	s
DH1VlvCtrLoopKp	31801	Control valve. Kp DW1	0.0	20.0	
DH1VlvCtrLoopTI	31802	Control valve. Ti DW1	0.0	1000.0	s
DH1VlvCtrLoopTD	31803	Control valve. TD DW1	0.0	1000.0	s
DW1SetLglWDay	31804	Weekdays leg.DW1	0	65535	
DH2VlvCtrLoopKp	32801	Control valve. Kp DW2	0.0	20.0	
DH2VlvCtrLoopTI	32802	Control valve. Ti DW2	0.0	1000.0	s
DH2VlvCtrLoopTD	32803	Control valve. TD DW2	0.0	1000.0	s
DW2SetLglWDay	32804	Weekdays leg.DW2	0	65535	
DH3VlvCtrLoopKp	33801	Control valve. Kp Stk	0.0	20.0	
DH3VlvCtrLoopTI	33802	Control valve. Ti Stk	0.0	1000.0	s
DH3VlvCtrLoopTD	33803	Control valve. TD Stk	0.0	1000.0	s
DW3SetLglWDay	33804	Weekdays leg.Stk	0	65535	

Binary InputsType No: 3

Object name (Mapping 1)	Object instance	Object description	State texts
CmnAlmAx	1201	Auxiliary alarm	Normal, Active, NULL
CmnArchFull	1202	Archive full	No, Reset, NULL
CmnManIO	1203	IO handoperated	None, Alarm, NULL
CmnManOffAlm	1204	Plants manual Off	No, Yes, NULL
CmnSeason	1205	Su/Wi switch	Winter, Summer, NULL
ComMBInitComAlm	3201	Modbus internal	OK, Alarm, NULL
ComMdlChgd	3202	Comm.module change	None, Restart, NULL
DW1CirPuCmdFbVal	31201	Circ.pump DW1	Normal, Alarm, NULL
DW1CrgFail	31202	Charge failure DW1	Normal, Active, NULL
DW1CrgPuChgPrioCntHours	31203	Op.hrs.ch.pump DW1	Off, On, NULL
DW1CrgPuCmdFbVal	31204	Charge pump DW1	Normal, Alarm, NULL
DW1CrgPuCmd2FbVal	31205	Charge pump 2 DW1	Normal, Alarm, NULL
DW1InpCirPuAlm	31206	Circ.pump DW1	Normal, Alarm, NULL
DW1InpCrgPu2Alm	31207	Charge pump 2 DW1	Normal, Alarm, NULL
DW1InpCrgPuAlm	31208	Charge pump DW1	Normal, Alarm, NULL
DW1InpFlow	31209	Flow switch DW1	Passive, Active, NULL
DW1InpTFlDvnAlmVal	31210	Dev.fl.temp.DW1	Normal, Alarm, NULL
DW1InpTFlPmDvnAlmVal	31211	Dev.fl.t.prim.DW1	Normal, Alarm, NULL
DW1InpTrnPu2Alm	31212	Primary pump 2 DW1	Normal, Alarm, NULL
DW1InpTrnPuAlm	31213	Primary pump DW1	Normal, Alarm, NULL
DW1LglFail	31214	Legion.failure DW1	Normal, Active, NULL
DW1ManOffAlm	31215	Manually Off DW1	No, Yes, NULL
DW1TraPuChgPrioCntHours	31216	Op.hrs.prim.p.DW1	Off, On, NULL
DW1TraPuCmdFbVal	31217	Primary pump DW1	Normal, Alarm, NULL
DW1TraPuCmd2FbVal	31218	Primary pump 2 DW1	Normal, Alarm, NULL
DW1VlvDiagOp	31219	3pValve DW1	Passive, Active, NULL
DW1WFr	31220	Water frost DW1	Normal, Alarm, NULL
DW2CirPuCmdFbVal	32201	Circ.pump DW2	Normal, Alarm, NULL

Object name (Mapping 1)	Object instance	Object description	State texts
DW2CrgFail	32202	Charge failure DW2	Normal, Active, NULL
DW2CrgPuChgPrioCntHours	32203	Op.hrs.ch.pump DW2	Off, On, NULL
DW2CrgPuCmdFbVal	32204	Charge pump DW2	Normal, Alarm, NULL
DW2CrgPuCmd2FbVal	32205	Charge pump 2 DW2	Normal, Alarm, NULL
DW2InpCirPuAlm	32206	Circ.pump DW2	Normal, Alarm, NULL
DW2InpCrgPu2Alm	32207	Charge pump 2 DW2	Normal, Alarm, NULL
DW2InpCrgPuAlm	32208	Charge pump DW2	Normal, Alarm, NULL
DW2InpFlow	32209	Flow switch DW2	Passive, Active, NULL
DW2InpTFlDvnAlmVal	32210	Dev.fl.temp.DW2	Normal, Alarm, NULL
DW2InpTFlPmDvnAlmVal	32211	Dev.fl.t.prim.DW2	Normal, Alarm, NULL
DW2InpTrnPu2Alm	32212	Primary pump 2 DW2	Normal, Alarm, NULL
DW2InpTrnPuAlm	32213	Primary pump DW2	Normal, Alarm, NULL
DW2LglFail	32214	Legion.failure DW2	Normal, Active, NULL
DW2ManOffAlm	32215	Manually Off DW2	No, Yes, NULL
DW2TraPuChgPrioCntHours	32216	Op.hrs.prim.p.DW2	Off, On, NULL
DW2TraPuCmdFbVal	32217	Primary pump DW2	Normal, Alarm, NULL
DW2TraPuCmd2FbVal	32218	Primary pump 2 DW2	Normal, Alarm, NULL
DW2VlvDiagOp	32219	3pValve DW2	Passive, Active, NULL
DW2WFr	32220	Water frost DW2	Normal, Alarm, NULL
DW3CirPuCmdFbVal	33201	Circ.pump Stk	Normal, Alarm, NULL
DW3CrgFail	33202	Charge failure Stk	Normal, Active, NULL
DW3CrgPuChgPrioCntHours	33203	Op.hrs.ch.pump Stk	Off, On, NULL
DW3CrgPuCmdFbVal	33204	Charge pump Stk	Normal, Alarm, NULL
DW3CrgPuCmd2FbVal	33205	Charge pump 2 Stk	Normal, Alarm, NULL
DW3InpCirPuAlm	33206	Circ.pump Stk	Normal, Alarm, NULL
DW3InpCrgPu2Alm	33207	Charge pump 2 Stk	Normal, Alarm, NULL
DW3InpCrgPuAlm	33208	Charge pump Stk	Normal, Alarm, NULL
DW3InpFlow	33209	Flow switch Stk	Passive, Active, NULL
DW3InpTFlDvnAlmVal	33210	Dev.fl.temp.Stk	Normal, Alarm, NULL
DW3InpTFlPmDvnAlmVal	33211	Dev.fl.t.prim.Stk	Normal, Alarm, NULL
DW3InpTrnPu2Alm	33212	Primary pump 2 Stk	Normal, Alarm, NULL
DW3InpTrnPuAlm	33213	Primary pump Stk	Normal, Alarm, NULL
DW3LglFail	33214	Legion.failure Stk	Normal, Active, NULL
DW3ManOffAlm	33215	Manually Off Stk	No, Yes, NULL
DW3TraPuChgPrioCntHours	33216	Op.hrs.prim.p.Stk	Off, On, NULL
DW3TraPuCmdFbVal	33217	Primary pump Stk	Normal, Alarm, NULL
DW3TraPuCmd2FbVal	33218	Primary pump 2 Stk	Normal, Alarm, NULL
DW3VlvDiagOp	33219	3pValve Stk	Passive, Active, NULL
DW3WFr	33220	Water frost Stk	Normal, Alarm, NULL
Sol1InpPuAlm	41201	Pump alarm Sol1	Normal, Alarm, NULL
Sol1PuCmdFbVal	41202	Pump feedback Sol1	Normal, Alarm, NULL
Sol1ManOff	41203	Pump manual Sol1	Auto, Off, NULL
Sol2InpPuAlm	42201	Pump alarm Sol2	Normal, Alarm, NULL
Sol2PuCmdFbVal	42202	Pump feedback Sol2	Normal, Alarm, NULL
Sol2ManOff	42203	Pump manual Sol2	Auto, Off, NULL
HG1BldgFr	21201	Building frost HC1	Normal, Alarm, NULL
HG1InpHDmdInB	21202	Thermostat HC1	NoHeat, Heat, NULL
HG1InpPu2Alm	21203	Pump 2 HC1	Normal, Alarm, NULL
HG1InpPuAlm	21204	Pump HC1	Normal, Alarm, NULL
HG1InpTFlDvnAlmVal	21205	Dev.fl.temp.HC1	Normal, Alarm, NULL
HG1InpTRDvnAlmVal	21206	Dev.room.temp.HC1	Normal, Alarm, NULL

Object name (Mapping 1)	Object instance	Object description	State texts
HG1InpTRtDvnAlmVal	21207	Dev.rt.temp.HC1	Normal, Alarm, NULL
HG1ManOff	21208	Manually Off HC1	No, Yes, NULL
HG1PuChgPrioCntHours	21209	Op.hrs.pump HC1	Off, On, NULL
HG1PuCmdFbVal	21210	Pump HC1	Normal, Alarm, NULL
HG1PuCmd2FbVal	21211	Pump 2 HC1	Normal, Alarm, NULL
HG1VlvDiagOp	21212	3pValve HC1	Passive, Active, NULL
HG1WFr	21213	Water frost HC1	Normal, Alarm, NULL
HG2BldgFr	22201	Building frost HC2	Normal, Alarm, NULL
HG2InpHDmdInB	22202	Thermostat HC2	NoHeat, Heat, NULL
HG2InpPu2Alm	22203	Pump 2 HC2	Normal, Alarm, NULL
HG2InpPuAlm	22204	Pump HC2	Normal, Alarm, NULL
HG2InpTFlDvnAlmVal	22205	Dev.fl.temp.HC2	Normal, Alarm, NULL
HG2InpTRDvnAlmVal	22206	Dev.room.temp.HC2	Normal, Alarm, NULL
HG2InpTRtDvnAlmVal	22207	Dev.rt.temp.HC2	Normal, Alarm, NULL
HG2ManOff	22208	Manually Off HC2	No, Yes, NULL
HG2PuChgPrioCntHours	22209	Op.hrs.pump HC2	Off, On, NULL
HG2PuCmdFbVal	22210	Pump HC2	Normal, Alarm, NULL
HG2PuCmd2FbVal	22211	Pump 2 HC2	Normal, Alarm, NULL
HG2VlvDiagOp	22212	3pValve HC2	Passive, Active, NULL
HG2WFr	22213	Water frost HC2	Normal, Alarm, NULL
HG3BldgFr	23201	Building frost HC3	Normal, Alarm, NULL
HG3InpHDmdInB	23202	Thermostat HC3	NoHeat, Heat, NULL
HG3InpPu2Alm	23203	Pump 2 HC3	Normal, Alarm, NULL
HG3InpPuAlm	23204	Pump HC3	Normal, Alarm, NULL
HG3InpTFlDvnAlmVal	23205	Dev.fl.temp.HC3	Normal, Alarm, NULL
HG3InpTRDvnAlmVal	23206	Dev.room.temp.HC3	Normal, Alarm, NULL
HG3InpTRtDvnAlmVal	23207	Dev.rt.temp.HC3	Normal, Alarm, NULL
HG3ManOff	23208	Manually Off HC3	No, Yes, NULL
HG3PuChgPrioCntHours	23209	Op.hrs.pump HC3	Off, On, NULL
HG3PuCmdFbVal	23210	Pump HC3	Normal, Alarm, NULL
HG3PuCmd2FbVal	23211	Pump 2 HC3	Normal, Alarm, NULL
HG3VlvDiagOp	23212	3pValve HC3	Passive, Active, NULL
HG3WFr	23213	Water frost HC3	Normal, Alarm, NULL
HG4BldgFr	24201	Building frost HC4	Normal, Alarm, NULL
HG4InpHDmdInB	24202	Thermostat HC4	NoHeat, Heat, NULL
HG4InpPu2Alm	24203	Pump 2 HC4	Normal, Alarm, NULL
HG4InpPuAlm	24204	Pump HC4	Normal, Alarm, NULL
HG4InpTFlDvnAlmVal	24205	Dev.fl.temp.HC4	Normal, Alarm, NULL
HG4InpTRDvnAlmVal	24206	Dev.room.temp.HC4	Normal, Alarm, NULL
HG4InpTRtDvnAlmVal	24207	Dev.rt.temp.HC4	Normal, Alarm, NULL
HG4ManOff	24208	Manually Off HC4	No, Yes, NULL
HG4PuChgPrioCntHours	24209	Op.hrs.pump HC4	Off, On, NULL
HG4PuCmdFbVal	24210	Pump HC4	Normal, Alarm, NULL
HG4PuCmd2FbVal	24211	Pump 2 HC4	Normal, Alarm, NULL
HG4VlvDiagOp	24212	3pValve HC4	Passive, Active, NULL
HG4WFr	24213	Water frost HC4	Normal, Alarm, NULL
PC1InpDRTDvnAlmVal	11201	Dev.rt.t.diff.PC1	Normal, Alarm, NULL
PC1InpHDmdInB	11202	Heat demand PC1	No, Yes, Null
PC1InpPu2Alm	11203	Pump 2 PC1	Normal, Alarm. NULL
PC1InpPuAlm	11204	Pump PC1	Normal, Alarm, NULL
PC1InpTFlSecDvnAlmVal	11205	Dev.fl.t.sec.PC1	Normal, Alarm, NULL

Object name (Mapping 1)	Object instance	Object description	State texts
PC1ManOff	11206	Manually Off PC1	No, Yes, NULL
PC1PuChgPrioCntHours	11207	Op.hrs.pump PC1	Off, On, NULL
PC1PuCmdFbVal	11208	Pump PC1	Normal, Alarm, NULL
PC1PuCmd2FbVal	11209	Pump 2 PC1	Normal, Alarm*NULL
PC1VlvDiagOp	11210	3pValve PC1	Passive, Active, NULL
PC1Vlv2DiagOp	11211	3pValve 2 PC1	Passive, Active, NULL
PC1WFr	11212	Water frost PC1	Normal, Alarm, NULL
PC2InpDRTDvnAlmVal	12201	Dev.rt.t.diff.PC2	Normal, Alarm, NULL
PC2InpHDmdInB	12202	Heat demand PC2	No, Yes, Null
PC2InpPu2Alm	12203	Pump 2 PC2	Normal, Alarm. NULL
PC2InpPuAlm	12204	Pump PC2	Normal, Alarm, NULL
PC2InpTFlSecDvnAlmVal	12205	Dev.fl.t.sec.PC2	Normal, Alarm, NULL
PC2ManOff	12206	Manually Off PC2	No, Yes, NULL
PC2PuChgPrioCntHours	12207	Op.hrs.pump PC2	Off, On, NULL
PC2PuCmdFbVal	12208	Pump PC2	Normal, Alarm, NULL
PC2PuCmd2FbVal	12209	Pump 2 PC2	Normal, Alarm*NULL
PC2VlvDiagOp	12210	3pValve PC2	Passive, Active, NULL
PC2Vlv2DiagOp	12211	3pValve 2 PC2	Passive, Active, NULL
PC2WFr	12212	Water frost PC2	Normal, Alarm, NULL
PC3InpDRTDvnAlmVal	13201	Dev.rt.t.diff.PC3	Normal, Alarm, NULL
PC3InpHDmdInB	13202	Heat demand PC3	No, Yes, Null
PC3InpPu2Alm	13203	Pump 2 PC3	Normal, Alarm. NULL
PC3InpPuAlm	13204	Pump PC3	Normal, Alarm, NULL
PC3InpTFlSecDvnAlmVal	13205	Dev.fl.t.sec.PC3	Normal, Alarm, NULL
PC3ManOff	13206	Manually Off PC3	No, Yes, NULL
PC3PuChgPrioCntHours	13207	Op.hrs.pump PC3	Off, On, NULL
PC3PuCmdFbVal	13208	Pump PC3	Normal, Alarm, NULL
PC3PuCmd2FbVal	13209	Pump 2 PC3	Normal, Alarm*NULL
PC3VlvDiagOp	13210	3pValve PC3	Passive, Active, NULL
PC3Vlv2DiagOp	13211	3pValve 2 PC3	Passive, Active, NULL
PC3WFr	13212	Water frost PC3	Normal, Alarm, NULL

Binary Outputs Type No: 4

Object name (Mapping 1)	Object instance	Object description	State texts
AlmOutHi	2401	Fault high output	No, Yes, Auto
AlmOutLo	2402	Fault low output	No, Yes, Auto
CmnHDmdOutB	1401	Heat demand output	No, Yes, Auto
CmnSchedOutAx	1402	Auxiliary output	Off, On, Auto
DW1CirPuCmdOnOff	31401	Com.circ.pump DW1	Off, On, Auto
DW1CrgPuCmdOnOff	31402	Com.char.pump DW1	Off, On, Auto
DW1CrgPuCmd2OnOff	31403	Com.char.p.2 DW1	Off, On, Auto
DW1ElCmdOnOff	31404	Com.el.imm.h.DW1	Off, On, Auto
DW1TraPuCmdOnOff	31405	Com.prim.pump DW1	Off, On, Auto
DW1TraPuCmd2OnOff	31406	Com.prim.p.2 DW1	Off, On, Auto
DW2CirPuCmdOnOff	32401	Com.circ.pump DW2	Off, On, Auto
DW2CrgPuCmdOnOff	32402	Com.char.pump DW2	Off, On, Auto
DW2CrgPuCmd2OnOff	32403	Com.char.p.2 DW2	Off, On, Auto
DW2ElCmdOnOff	32404	Com.el.imm.h.DW2	Off, On, Auto

Object name (Mapping 1)	Object instance	Object description	State texts
DW2TraPuCmdOnOff	32405	Com.prim.pump DW2	Off, On, Auto
DW2TraPuCmd2OnOff	32406	Com.prim.p.2 DW2	Off, On, Auto
DW3CirPuCmdOnOff	33401	Com.circ.pump Stk	Off, On, Auto
DW3CrgPuCmdOnOff	33402	Com.char.pump Stk	Off, On, Auto
DW3CrgPuCmd2OnOff	33403	Com.char.p.2 Stk	Off, On, Auto
DW3ElCmdOnOff	33404	Com.el.imm.h.Stk	Off, On, Auto
DW3TraPuCmdOnOff	33405	Com.prim.pump Stk	Off, On, Auto
DW3TraPuCmd2OnOff	33406	Com.prim.p.2 Stk	Off, On, Auto
HG1PuCmdOnOff	21401	Command pump HC1	Off, On, Auto
HG1PuCmd2OnOff	21402	Command pump 2 HC1	Off, On, Auto
HG2PuCmdOnOff	22401	Command pump HC2	Off, On, Auto
HG2PuCmd2OnOff	22402	Command pump 2 HC2	Off, On, Auto
HG3PuCmdOnOff	23401	Command pump HC3	Off, On, Auto
HG3PuCmd2OnOff	23402	Command pump 2 HC3	Off, On, Auto
HG4PuCmdOnOff	24401	Command pump HC4	Off, On, Auto
HG4PuCmd2OnOff	24402	Command pump 2 HC4	Off, On, Auto
PC1PuCmdOnOff	11401	Command pump PC1	Off, On, Auto
PC1PuCmd2OnOff	11402	Command pump 2 PC1	Off, On, Auto
PC1VlvRefil	11403	Com.refilling PC1	Close, Open, Auto
PC1VlvCas	11407	Com. Shut off valve PC1	Close, Open, Auto
PC2PuCmdOnOff	12401	Command pump PC2	Off, On, Auto
PC2PuCmd2OnOff	12402	Command pump 2 PC2	Off, On, Auto
PC2VlvRefil	12403	Com.refilling PC2	Close, Open, Auto
PC2VlvCas	12407	Com. Shut off valve PC2	Close, Open, Auto
PC3PuCmdOnOff	13401	Command pump PC3	Off, On, Auto
PC3PuCmd2OnOff	13402	Command pump 2 PC3	Off, On, Auto
PC3VlvRefil	13403	Com.refilling PC3	Close, Open, Auto
PC3VlvCas	13407	Com. Shut off valve PC3	Close, Open, Auto
Sol1PuPos	41401	Command pump Sol1	Off, On, Auto
Sol2PuPos	42401	Command pump Sol2	Off, On, Auto

Calendar Type No: 6

Object name (Mapping 1)	Object instance	Object description
CmnCln	1011	Calendar common
CmnClnAx	1012	Calendar auxiliary output

DeviceType No: 8

Object name	Object instance	Object description
e.g. POL908_FF2C8D	e.g.1693899	e.g.POL908_FF2C8D-Climatix

Multistate Input Type No: 13

Object name (Mapping 1)	Object instance	Object description	State texts
CfgIO\ExtIOErr	21	Extension IO module fault	NULL, Normal, 1, 2, 1+2, 3, 1+3, 2+3, 1+2+3, 4, 1+4, 2+4, 1+2+4, 3+4, 1+3+4, 2+3+4, 1+2+3+4

Schedule Type No: 17

Object name (Mapping 1)	Object instance	Object description	State texts
CmnSched	1013	Time schedule common	
CmnSchedAx	1014	Time schedule aux. output	
HG1Sched	21011	Time schedule HC1	
HG2Sched	22011	Time schedule HC2	
HG3Sched	23011	Time schedule HC3	
HG4Sched	24011	Time schedule HC4	
DW1Sched	31011	Time schedule DW1	
DW1SchedCirPu	31012	Time sched. circ. pump DW1	
DW2Sched	32011	Time schedule DW2	
DW2SchedCirPu	32012	Time sched. circ. pump DW2	
DW3Sched	33011	Time schedule Stk	
DW3SchedCirPu	33012	Time sched. circ. pump Stk	

Multistate Value Type No: 19

Object name (Mapping 1)	Object instance	Object description	State texts (Legend for "Special" at the end of the list)
CmnAckCom	1601	Ackn.from commun.	, Execute
CmnArchivExport	1602	Export archive	None, If full, Monthly, Weekly, Excute
CmnBldgFrHG	1603	Building frost HC	No, Yes
CmnHFstDay	1604	Heating-period start day	1, 2, …, 30, 31
CmnHFstMth	1605	Heating-period start month	\, Jan, Feb, Mar, Apr, May, Jun, Jul, Aug, Sep, Oct, Nov, Dec
CmnHLstDay	1606	Heating-period end day	1, 2, …, 30, 31
CmnHLstMth	1607	Heating-period end month	\, Jan, Feb, Mar, Apr, May, Jun, Jul, Aug, Sep, Oct, Nov, Dec
CmnOpModCom	1608	Operating mode from comm.	Auto, BuildProt, Economy, Comfort
DW1Crg	31601	Start charging DW1	, Execute, ExecLegio
DW1CrgPrio	31602	Prio.charging DW1	None, MaxLim, Absolute, Shift, Shi+MaxLm
DW1OpModCom	31603	Operating mode communication DW1	Auto, PlantProt, Reduced, Normal
DW1SetCrgRetry	31604	Number charge retry DW1	0, 1, …, 29, 30
DW2Crg	32601	Start charging DW2	, Execute, ExecLegio
DW2CrgPrio	32602	Prio. charging DW2	None, MaxLim, Absolut, Shift, Shi+MaxLm
DW2OpModCom	32603	Operating mode communication DW2	Auto, PlantProt, Reduced, Normal
DW2SetCrgRetry	32604	Number charge retry DW2	0, 1…, 29, 30
DW3Crg	33601	Start charging Stk	, Execute, ExecLegio
DW3CrgPrio	33602	Prio. charging Stk	None, MaxLim, Absolut, Shift, Shi+MaxLm
DW3OpModCom	33603	Operating mode communication Stk	Auto, PlantProt, Reduced, Normal
DW3SetCrgRetry	33604	Number charge retry Stk	0, 1…, 29, 30
HG1InpDisSigPdc	21601	Dis. sign. prod. HC1	No, Yes
HG1InpTRSel	21602	Select room t.HC1	RoomSens, RoomUnit, Minimum, Maximum, Average
HG1OpModCom	21603	Operating mode communication HC1	Auto, BuildProt, Economy, Comfort
HG2InpDisSigPdc	22601	Dis.sign.prod.HC2	No, Yes
HG2InpTRSel	22602	Select room t.HC2	RoomSens, RoomUnit, Minimum, Maximum, Average
HG2OpModCom	22603	Operating mode communication HC2	Auto, BuildProt, Economy, Comfort
HG3InpDisSigPdc	23601	Dis.sign.prod.HC3	No, Yes
HG3InpTRSel	23602	Select room temperature HC3	RoomSens, RoomUnit, Minimum, Maximum, Average
HG3OpModCom	23603	Operating mode communication HC3	Auto, BuildProt, Economy, Comfort
HG4InpDisSigPdc	24601	Dis.sign.prod.HC4	No, Yes
HG4InpTRSel	24602	Select room t.HC4	RoomSens, RoomUnit, Minimum, Maximum, Average
HG4OpModCom	24603	Op. mode comm.HC4	Auto, BuildProt, Economy, Comfort
Sol1OpModOff	41601	Op. mode off Sol1	Auto, Off
Sol1OpModMan	41602	Op. mode manual Sol1	Auto, Off, On
Sol1PuCmdAlmFbOff	41603	Alm/feedback off Sol1	No, Yes
Sol2OpModOff	42601	Op. mode off Sol2	Auto, Off
Sol2OpModMan	42602	Op. mode manual Sol2	Auto, Off, On
Sol2PuCmdAlmFbOff	42603	Alm/feedback off Sol2	No, Yes
CmnHCnsMgtHDmdVld	1651	Heat demand	Passive, Active
CmnOpMod	1652	Main operating mode	Off, BuildProt, Economy, Comfort

Object name (Mapping 1)	Object instance	Object description	State texts (Legend for "Special" at the end of the list)
CmnOpSta	1653	Operating state	- ?? - Alarm - Out of Service - Summer switch - ?? - Manual operation - Room unit - Summer period - Summer function - Overridden - ?? - Time program - No time program
DW1ActvLm	31651	Actual limitation DW1	None, ReturnTemp, CommonHeatmeter, CommonFlow, CommonPower
DW1CirPuOpSta	31652	Mode circ.pump DW1	Special 4
DW1CrgPu2OpSta	31653	Mode char.p.2 DW1	Special 4
DW1CrgPuActlPrio	31654	Prio.char.pump DW1	Off, Pump1, Pump2
DW1CrgPuOpSta	31655	Mode char.pump DW1	Special 4
DW1OpMOpMod	31656	Operating mode DW1	Off, Protection, Reduced, Normal
DW1OpMOpSta	31657	Op.state DW1	Special 5
DW1TraPu2OpSta	31658	Mode prim.p.2 DW1	Special 4
DW1TraPuActlPrio	31659	Prio.prim.pump DW1	Off, Pump1, Pump2
DW1TraPuOpSta	31660	Mode prim.pump DW1	Special 4
DW1VlvCtrSta	31661	Mode valve DW1	Special 6
DW2ActvLm	32651	Act.limitation DW2	None, ReturnTemp, CommonHeatmeter, CommonFlow, CommonPower
DW2CirPuOpSta	32652	Mode circ.pump DW2	Special 4
DW2CrgPu2OpSta	32653	Mode char.p.2 DW2	Special 4
DW2CrgPuActlPrio	32654	Prio.char.pump DW2	Off, Pump1, Pump2
DW2CrgPuOpSta	32655	Mode char.pump DW2	Special 4
DW2OpMOpMod	32656	Operating mode DW2	Off, Protection, Reduced, Normal
DW2OpMOpSta	32657	Operating state DW2	Special 5
DW2TraPu2OpSta	32658	Mode prim.p.2 DW2	Special 4
DW2TraPuActlPrio	32659	Prio.prim.pump DW2	Off, Pump1, Pump2
DW2TraPuOpSta	32660	Mode prim.pump DW2	Special 4
DW2VlvCtrSta	32661	Mode valve DW2	Special 6
DW3ActvLm	33651	Act.limitation Stk	None, ReturnTemp, CommonHeatmeter, CommonFlow, CommonPower
DW3CirPuOpSta	33652	Mode circ.pump Stk	Special 4
DW3CrgPu2OpSta	33653	Mode char.p.2 Stk	Special 4
DW3CrgPuActlPrio	33654	Prio.char.pump Stk	Off, Pump1, Pump2
DW3CrgPuOpSta	33655	Mode char.pump Stk	Special 4
DW3OpMOpMod	33656	Operating mode Stk	Off, Protection, Reduced, Normal
DW3OpMOpSta	33657	Operating state Stk	Special 5
DW3TraPu2OpSta	33658	Mode prim.p.2 Stk	Special 4
DW3TraPuActlPrio	33659	Prio.prim.pump Stk	Off, Pump1, Pump2
DW3TraPuOpSta	33660	Mode prim.pump Stk	Special 4
DW3VlvCtrSta	33661	Mode valve Stk	Special 6
HG1ActvLm	21651	Actual limitation HC1	None, ReturnTemp, CommonHeatmeter, CommonFlow, CommonPower
HG1OpMod	21652	Operating mode HC1	Off, BuildProt, Economy, Comfort
HG1OpModRUn	21653	Op.mode room u.HC1	Auto, Economy, Comfort, BuildProt
HG1OpSta	21654	Operating state HC1	Special 7
HG1Pu2OpSta	21655	Mode pump 2 HC1	Special 4
HG1PuActlPrio	21656	Prio. pump HC1	Off, Pump1, Pump2

Object name (Mapping 1)	Object instance	Object description	State texts (Legend for "Special" at the end of the list)
HG1PuOpSta	21657	Mode pump HC1	Special 4
HG1SetSpSta	21658	Mode setpoint HC1	Special 8
HG1VlvCtrSta	21659	Mode valve HC1	Special 6
HG2ActvLm	22651	Act.limitation HC2	None, ReturnTemp, CommonHeatmeter, CommonFlow, CommonPower
HG2OpMod	22652	Operating mode HC2	Off, BuildProt, Economy, Comfort
HG2OpModRUn	22653	Op.mode room u.HC2	Auto, Economy, Comfort, BuildProt
HG2OpSta	22654	Op.state HC2	Special 7
HG2Pu2OpSta	22655	Mode pump 2 HC2	Special 4
HG2PuActlPrio	22656	Prio.pump HC2	Off, Pump1, Pump2
HG2PuOpSta	22657	Mode pump HC2	Special 4
HG2SetSpSta	22658	Mode setpoint HC2	Special 8
HG2VlvCtrSta	22659	Mode valve HC2	Special 6
HG3ActvLm	23651	Act.limitation HC3	None, ReturnTemp, CommonHeatmeter, CommonFlow, CommonPower
HG3OpMod	23652	Operating mode HC3	Off, BuildProt, Economy, Comfort
HG3OpModRUn	23653	Op.mode room u.HC3	Auto, Economy, Comfort, BuildProt
HG3OpSta	23654	Op.state HC3	Special 7
HG3Pu2OpSta	23655	Mode pump 2 HC3	Special 4
HG3PuActlPrio	23656	Prio.pump HC3	Off, Pump1, Pump2
HG3PuOpSta	23657	Mode pump HC3	Special 4
HG3SetSpSta	23658	Mode setpoint HC3	Special 8
HG3VlvCtrSta	23659	Mode valve HC3	Special 6
HG4ActvLm	24651	Act.limitation HC4	None, ReturnTemp, CommonHeatmeter, CommonFlow, CommonPower
HG4OpMod	24652	Operating mode HC4	Off, BuildProt, Economy, Comfort
HG4OpModRUn	24653	Op.mode room u.HC4	Auto, Economy, Comfort, BuildProt
HG4OpSta	24654	Op.state HC4	Special 7
HG4Pu2OpSta	24655	Mode pump 2 HC4	Special 4
HG4PuActlPrio	24656	Prio.pump HC4	Off, Pump1, Pump2
HG4PuOpSta	24657	Mode pump HC4	Special 4
HG4SetSpSta	24658	Mode setpoint HC4	Special 8
HG4VlvCtrSta	24659	Mode valve HC4	Special 6
PC1LimActv	11651	Act.limitation PC1	Special 9
PC1OpMod	11652	Operating mode PC1	Off, On
PC1OpSta	11653	Op.state PC1	Special 10
PC1Pu2OpSta	11654	Mode pump 2 PC1	Special 4
PC1PuActlPrio	11655	Prio.pump PC1	Off, Pump1, Pump2
PC1PuOpSta	11656	Mode pump PC1	Special 4
PC1VlvCtrSta	11657	Mode valve PC1	Special 6
PC2LimActv	12651	Act.limitation PC2	Special 9
PC2OpMod	12652	Operating mode PC2	Off*On
PC2OpSta	12653	Op.state PC2	Special 10
PC2Pu2OpSta	12654	Mode pump 2 PC2	Special 4
PC2PuActlPrio	12655	Prio.pump PC2	Off, Pump1, Pump2
PC2PuOpSta	12656	Mode pump PC2	Special 4
PC2VlvCtrSta	12657	Mode valve PC2	Special 6
PC3LimActv	13651	Act.limitation PC3	Special 9
PC3OpMod	13652	Operating mode PC3	Off*On
PC3OpSta	13653	Op.state PC3	Special 10
PC3Pu2OpSta	13654	Mode pump 2 PC3	Special 4
PC3PuActlPrio	13655	Prio.pump PC3	Off, Pump1, Pump2

Object name (Mapping 1)	Object instance	Object description	State texts (Legend for "Special" at the end of the list)
PC3PuOpSta	13656	Mode pump PC3	Special 4
PC3VlvCtrSta	13657	Mode valve PC3	Special 6
Sol1OpMod	41651	Present op. mode Sol1	Off*On
Sol1OpSta	41652	Present op. state Sol1	Special 11
Sol1PuOpSta	41653	Present pump op. state Sol1	Special 4
Sol2OpMod	42651	Present op. mode Sol2	Off*On
Sol2OpSta	42652	Present op. state Sol2	Special 11
Sol2PuOpSta	42653	Present pump op. state Sol2	Special 4

Integer Value Type No: 48

Object name (Mapping 1)	Object instance	Object description	State texts
CmnHtmFabNr	1114	Heat meter Fab Nr. Cmn	Optional send by Heat meter
PC1InpHtmFabNr	11116	Heat meter Fab Nr. PC1	Optional send by Heat meter
PC2InpHtmFabNr	12116	Heat meter Fab Nr. PC2	Optional send by Heat meter
PC3InpHtmFabNr	13116	Heat meter Fab Nr. PC3	Optional send by Heat meter

Legend for "Special"

Special 4: OPSTA Pump

- Out of service
- Service
- Alarm
- Forced
- Timer active
- Manual operation
- Room unit
- Pump kick
- Normal operation
- Time program
- No operation

Special 5: OPSTA Domestic hot water

- Alarm
- Manually
- Water frost
- Flow active
- Elect.charg.manual
- Elect.charg.legio.
- Electric charging
- Charging manual
- Charging legio.
- Charging active
- Manual operation
- Overridden
- Permanent running
- Time program
- Common time prog.

Special 6: OPSTA Valve

- Out of service
- Service
- Alarm position
- Forced position
- Max.limitation
- Min.limitation
- Manual operation
- Room unit
- Normal operation
- Time program
- No operation

-

Special 7: OPSTA Heat circuit

- Alarm
- Manually
- Frost
- Build.prot.
- Summer switch
- Disable
- Manual operation
- Overridden
- Summer funct.
- Quick setb.
- Daily heat lim.
- Room temp.lim.
- Thermostat
- Heat demand
- Room unit
- Permanent running
- Overrun
- Optimum Start/Stop
- Time program
- Common time prog.

Special 8: OPSTA Set point

- Off
- FlTempHighLim
- FlTempLowLim
- RtTempHighLim
- FlTempIncrLim.
- HeatCurve

Special 9: OPSTA Limitation Pre controller

- None
- Return temperature
- Diff.Rt.temp.(DRT)
- Flow
- Power
- Common heatmeter
- Common flow
- Common power

Special 10: OPSTA Pre controller

- Alarm
- Manually
- Water frost
- Fix setpoint
- Fix setp.+ECO
- Outs.temp curve
- Outs.T.curve+ECO
- Emergency demand
- Heat demand
- Overrun
- No heat demand

Special 11: OPSTA Solar Pump

- Alarm
- ManOff
- ColFrost
- ColEvap
- ReClg
- StoMax
- ColProt
- StoNom
- Manual
- Auto

Notification classes for alarms, Type No: 15

Object name (Mapping 1)	Object instance	Object description
MessageClass0	11	Alarm class Danger alarm (A) status
MessageClass1	21	Alarm class Critical alarm (A) status
MessageClass2	31	Alarm class Low alarm (B) status
MessageClass3	41	Alarm class Warning alarm (C) status
MessageClass5	12	
MessageClass6	22	
MessageClass7	32	
MessageClass8	42	
MessageClass9	13	
MessageClass10	23	
MessageClass11	33	
MessageClass12	43	
MessageClass13	14	
MessageClass14	24	
MessageClass15	34	

BACnet priority for each notification class

	Prio			Ack		
Object name	**ToOff Normal**	**To Fault**	**To Normal**	**Off Normal**	**To Fault**	**To Normal**
NotificationClass0	1	1	5	1	1	0
NotificationClass1	1	1	5	1	1	0
NotificationClass2	2	2	6	1	1	0
NotificationClass3	3	3	8	1	1	0
NotificationClass5	1	1	5	0	0	0
NotificationClass6	2	2	5	0	0	0
NotificationClass7	3	3	6	0	0	0
NotificationClass8	6	6	8	0	0	0
NotificationClass9	1	1	5	0	0	0
NotificationClass10	2	2	5	0	0	0
NotificationClass11	3	3	6	0	0	0
NotificationClass12	6	6	8	0	0	0
NotificationClass13	1	1	5	0	0	0
NotificationClass14	2	2	5	0	0	0
NotificationClass15	3	3	5	0	0	0

Selection of the mapping

There are two BACnet mappings available.

- The **mapping 1** is described in this document.
- The mapping 2 works with apostrophes in between the elements.

Example

- Mapping 1 = HG2SetSpShTRCmf
- Mapping 2 = HG2'Set'SpShTRCmf

Index

Siemens Switzerland Ltd.
Building Technologies Division
International Headquarters
Gubelstrasse 22
6301 Zug
Switzerland
Tel. +41 58-724 24 24
www.siemens.com/buildingtechnologies